FIG. 56.

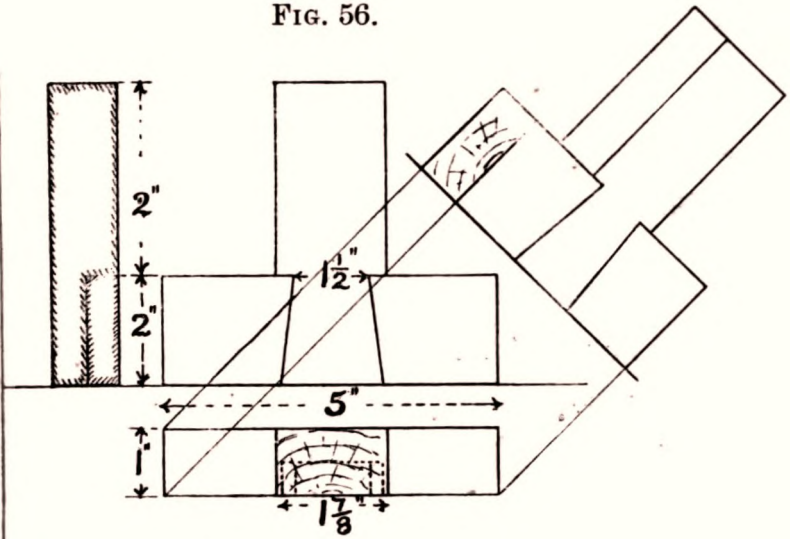

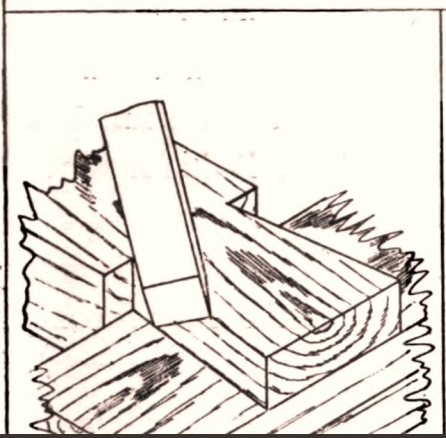

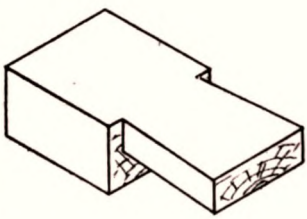

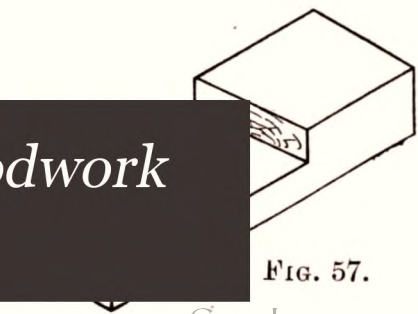

FIG. 57.

Educational woodwork

Arthur Cawdron Horth

Digitized by Google

Digitized by Google

Horth
VEN

Digitized by Google

Digitized by Google

Digitized by Google

Digitized by Google

37142 36723 XI 4

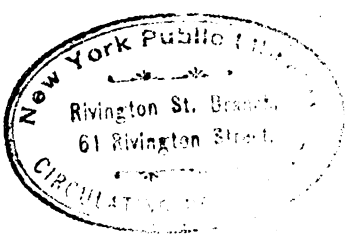

Digitized by Google

Digitized by Google

EDUCATIONAL WOODWORK.

A Text Book for the use of Instructors and Students in Elementary and Secondary Schools,

By A. C. HORTH.

(Member of the Art and Manual Training Department, Roan School for Boys, Greenwich.)

CONTAINING

A THREE YEARS' COURSE OF WOODWORK, DRAWING, AND OBJECT LESSONS, AND CHAPTERS ON DISCIPLINE, ORGANISATION AND METHOD, FITTINGS AND FURNITURE, AND THE INSTRUCTION OF THE DEAF, BLIND, AND SPECIAL CHILDREN.

With nearly 200 illustrations.

NEW YORK:

SPON & CHAMBERLAIN, 123-125 LIBERTY ST.

1905

Digitized by Google

THE NEW YORK PUBLIC LIBRARY
822744
ASTOR LENOX AND TILDEN FOUNDATIONS
R 1918 L

CONTENTS.

	Page.
First year Course	7
Second Year Course	44
Third Year Course	72
Fittings and Furniture	98
Discipline	106
Organization and Method	112
The Instruction of the Physically and Mentally Deficient and blind	120
Object Lessons on the Black Board	130

Digitized by Google

Ref. 371.42
H4

PREFACE.

PROPERTY OF THE
CITY OF NEW YORK

THE object of this work is to provide a graduated educational course of woodwork, based on a succession of joints, with a model following each joint, and, as far as possible, based on it.

Special chapters are given on the discipline, method, organisation, and fittings necessary for the carrying on of the work on broad and educational lines.

A section is devoted to the manual training of the Deaf, Blind, Physically or otherwise deficient children, with a suggested course of woodwork suitable for them. The general course given in this book has been successfully carried out by the author at the King Edward VI. Grammar School, Retford, and also at the Roan Secondary School, where the models suggested in the third year's course have been found to be of considerable value to the science section of this large and important school. A complete scheme of object lessons, with specimen blackboard illustrations is also given.

The author is greatly indebted to Messrs. J. Scott Knight and J. B. Joyce for their valuable help in revising the manuscript and proofs; also to Mr. C. W. Winter, of the Hugh Myddleton Deaf Centre, for the drawings of the strip work courses designed by him.

A. C. H.

61 Rivington Street.
CIRCULATING DEPARTMENT
36723
Digitized by Google

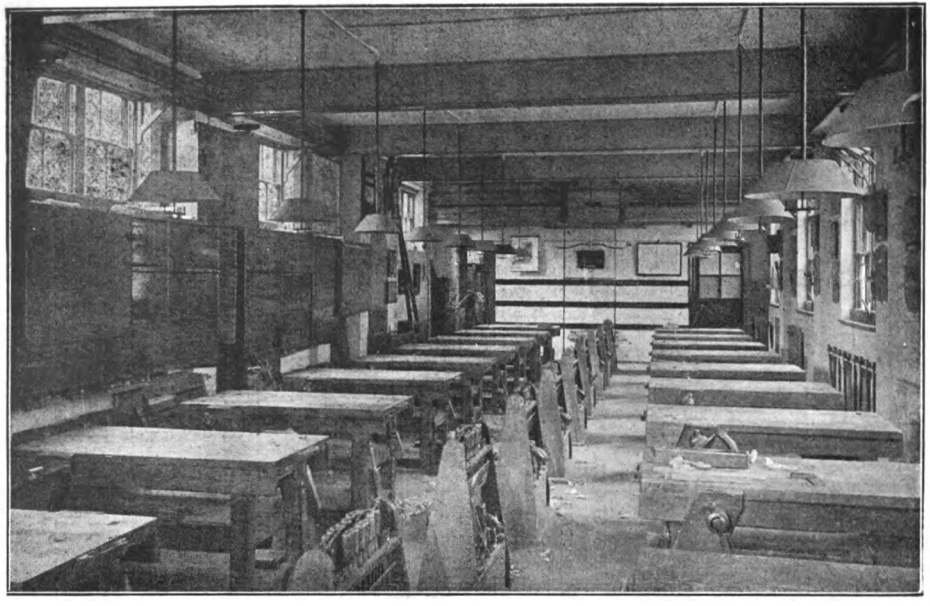

AN EDUCATIONAL WORKSHOP.

Digitized by Google

Educational Woodwork.

FIRST YEAR COURSE.

EXERCISE 1.

Sawing with Tenon Saw. (Fig. 1)

Drawing: *Materials.*—Paper or book, 12in. boxwood ruler, 45 deg. and 60 deg. set squares and H pencil.

Teaching Method.—Show on hinged blackboard the two projections (Fig. 2), using a block of wood double size, and explain the position of XY; then have a line drawn across the paper to represent it, next mark off a distance below for base line, and after marking off from the centre of XY, half the length of the wood each way, draw the upright lines. Here great care must be taken to see that the square and rule are properly held. The distances from the XY should now be marked from the given sizes and then the horizontal lines drawn. This gives the projections of a plain block of wood 10in. by 2in. by 1in., and to complete the drawing the

Digitized by Google

sizes shown in Fig. 1 must be marked off on one line, and drawn with the set square, ruler and pencil held as in Fig. 3.

At the end of lesson the isometric (iso-equal, metric-measurement) projection may be attempted as in Fig. 4.

BENCHWORK: *Materials.*—A piece of wood 12in. long should be cut from a planed 2in. by 1in. yellow deal batten and given to each boy, who should also have a sawing board (Fig. 6) tenon saw, 4½in. try square, steel rule and marking knife.

Teaching Method.—Draw the attention of the class to the face marks (Fig. 5), and show the correct method of holding try square and marking knife (Fig. 7), and commence by marking off a line ¼in. from end and carry it round, keeping the square either on face side or edge. This end must now be sawn off square. Fig. 8 shows the correct method, with the eyes over the saw and the boy standing well back from the bench. The whole length of the saw blade should be used, and with the handle grasped firmly the cuts should be deliberately made. The first attempt may be a failure, but by standing the block on the sawn end the boy will see the amount of his error, and will make another attempt. When this end is square repeat the process at the other. This should leave a piece of wood at least 11 inches long.

At this stage explain that the sawcut has a certain thickness, and if the piece of wood which is being

Digitized by Google

FIG. 1.

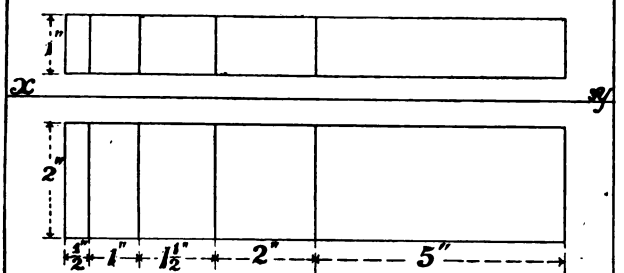

FIG. 2.

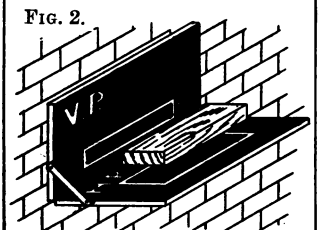

FIG. 4.

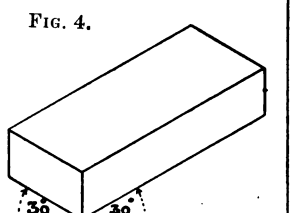

FIG. 3.

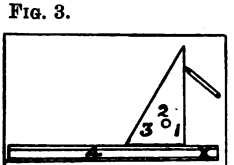

Position of fingers in holding rule & set-square.

FIG. 5.

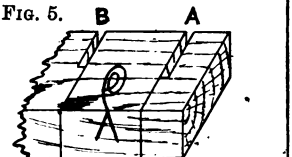

A · Proper side of line for sawing ends off
B · · · · · · pieces ·

EXERCISE 1.

B

Digitized by Google

cut up is 10in. long and 4 cuts made in it, the pieces would then be less than 10in. Great care must be taken that each piece cut off measures the exact size. Start by marking off the $\frac{1}{2}$in. piece, and then,

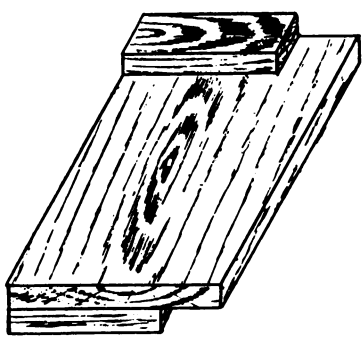

FIG. 6.

placing the saw just outside the line, saw it off (Fig 5). The other pieces should be sawn off in the same manner, and if care has been taken, they will measure 10in. when placed together, and a fair command of the tools used will be gained.

Digitized by Google

FIG. 7.

FIG. 8.

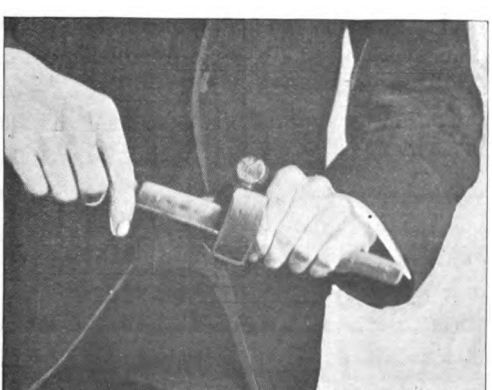

FIG. 12.

Digitized by Google

EXERCISE 2.

Paring with the Chisel (Fig. 9).

Drawing: *Materials.*—Same as Exercise 1.

Teaching Method.—This drawing is only a little more difficult than the previous one, the method being the same. The upright isometric drawing of the block (Fig. 10) should be made.

Benchwork: *Materials.*—A piece of planed batten 11in. long, tools as in Exercise 1, plus a marking gauge and ⅝in. Firmer chisel.

Teaching Method.—Commence by marking off and sawing to size, 10in., and then mark off the grooves with a marking knife on the face and lightly down each edge, and then set the marking gauge (Fig. 12) to the depth of grooves (Fig. 9). The actual gauging is an operation which although easy, requires a lot of care, and attention must be paid to Fig. 13. The stock must be kept close to face side or else the spur will run with the grain. Fig. 14 shows how gauging may be taught in motions: 1st, by running the gauge along without making a mark; 2nd, by repeating the movement with the spur lightly touching the wood; 3rd, by finishing with the spur a little deeper.

If these directions are carefully carried out no great difficulty will be experienced. When both edges of the wood are gauged, the sides of one groove should be sawn, attention being drawn to Fig. 5 to avoid mistakes in sawing.

Digitized by Google

FIG. 9.

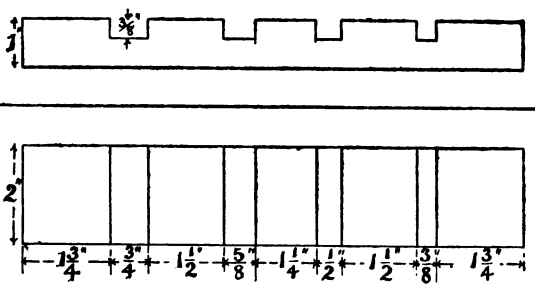

FIG. 11.

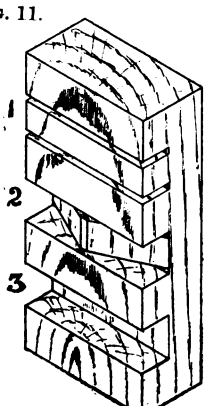

FIG. 10.

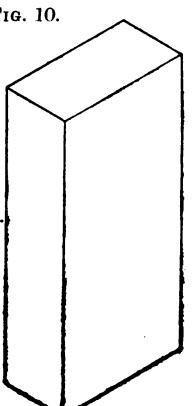

EXERCISE 2.

Digitized by Google

The wood must now be placed in the vice, and with the chisel firmly held in the right hand, the boy should take up the position shown in Fig. 15, and take thin parings down to the nearest gauge-line and halfway at the top (Fig. 11), and then reverse the wood and

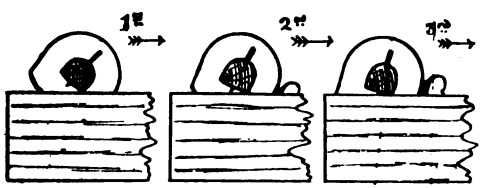

FIG. 14.

finish to other gauge-line with horizontal cuts, testing when the line is reached with the edge of try square. The same method is followed in cutting the other grooves.

This exercise gives further practice with the saw, and introduces the gauge and chisel.

Digitized by Google

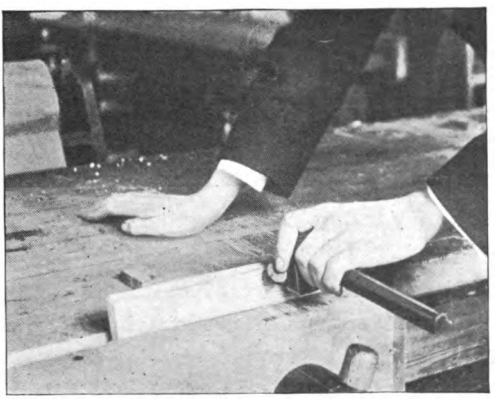

FIG. 13.

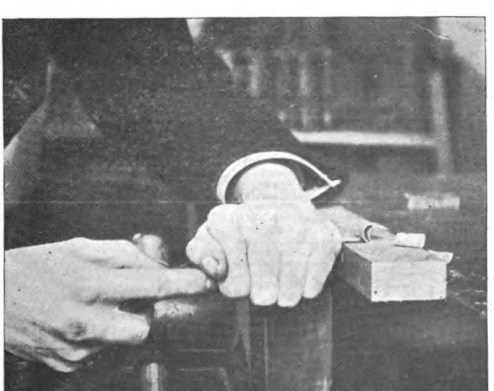

FIG. 15.

Digitized by Google

EXERCISE 3.

Grooves of Varying Widths and Depths. (Fig. 16).

Drawing.—The difficulty is only slightly increased, and another isometric view of the block A is given (Fig. 17), also oblique projections in two positions (Figs. 18, 19).

Benchwork: *Materials.*—Planed deal batten 11in. long, and $\frac{7}{8}$in., $\frac{3}{8}$in. and $\frac{1}{4}$in. Firmer chisels.

Method.—This exercise contains no new operations, and if care is taken in the gauging it should be done accurately. Each groove should be finished separately, and carefully tested and measured when finished.

With a class of older boys the wood for this exercise may be planed by the boys themselves, but with smaller boys it is better to leave it until either Exercise 4 or 5.

Digitized by Google

FIG. 16.

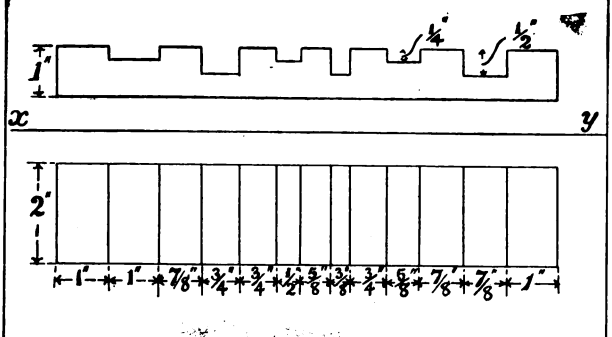

FIG. 17.

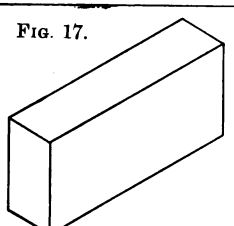

FIG. 18.

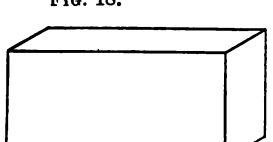

Oblique projection of A.

FIG. 19.

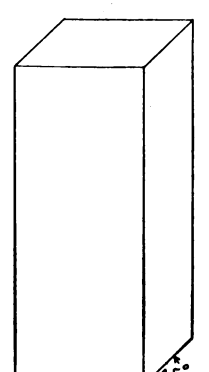

Oblique projection of A.

EXERCISE 3.

Digitized by Google

EXERCISE 4.

Exercise in Vertical Paring. (FIG. 20).

DRAWING.—A simple isometric projection is given (Fig. 21), as well as the drawing of the exercise.

BENCHWORK: *Materials.*—Planed or unplaned batten 11in. long.

Method.—The gauge-lines in this exercise are more difficult, but with the practice gained in the previous exercises they should be well done. Fig. 22 shows the best way of holding wood and gauge, and the same method (Fig. 14) used as in edge-gauging. After the grooves are marked out, place the wood on a paring board, hold chisel as shown in Fig. 23, and pare with thin shavings down to the proper depth. Repeat this in the case of all the grooves, finishing one at a time.

Digitized by Google

FIG. 20.

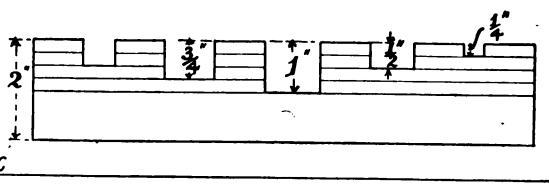

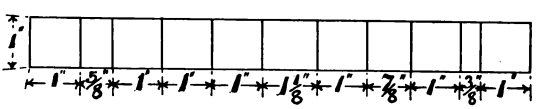

FIG 21.

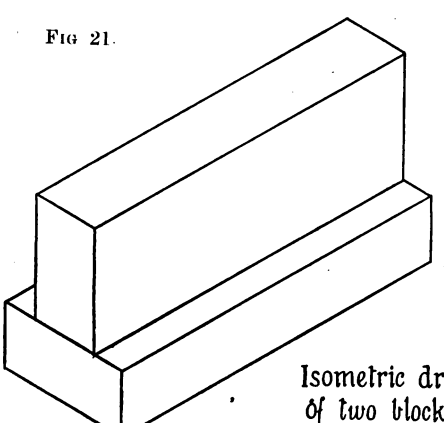

Isometric drawing of two blocks A.

EXERCISE 4.

Digitized by Google

EXERCISE 5.

Housing Joint. (Fig. 24).

Drawing.—A side elevation of this exercise is given, and the isometric projection of the grooved piece is set as a drawing exercise (Fig. 25).

Fig. 22.

Benchwork : *Materials.* — Unplaned basswood batten, 11in. by 2in. by 1in., jackplane, mallet, hammer, and straight edge.

Method.—If the previous exercises have been worked in planed wood, the practice and confidence gained

Digitized by Google

FIG. 24.

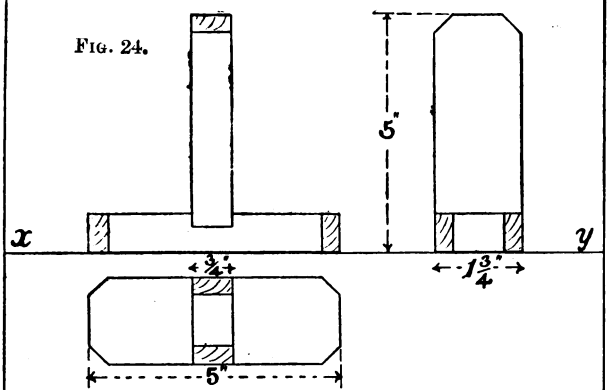

FIG. 26.

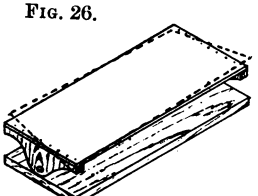

FIG. 25.

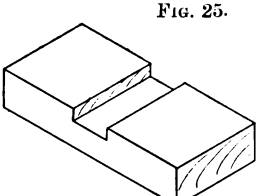

FIG. 26A. Top of thin cardboard about 18"×9"

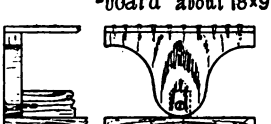

FIG. 23.

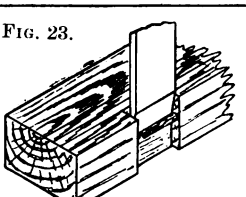

EXERCISE 5.

Digitized by Google

will be of great value when commencing planing. The action and parts of the plane should be first explained, and each boy should take apart and set his plane before being allowed to use it. Figs. 27, 28, 29, show the best method of doing this, and when each plane is

Fig. 27.

properly set the boy should stand just behind his wood with his feet well apart, and holding the plane as in Fig. 30. There are several methods of planing, but it is better to teach a straight firm stroke right along the wood, and test as soon as the surface is

Digitized by Google

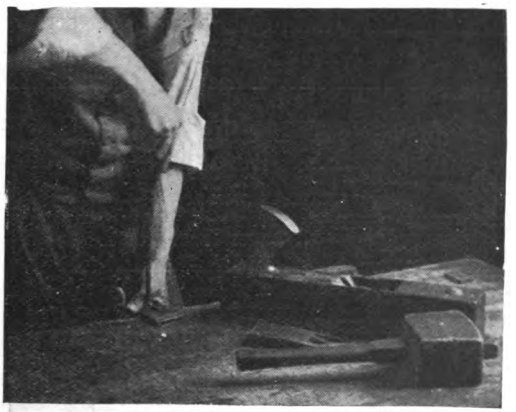

FIG. 28.

FIG. 30.

Digitized by Google

smooth with the straight edge, placed across the diagonals and from end to end (Fig. 38), and also with try square (Fig. 31). Care must be exercised that the surface is quite true, and the use of an apparatus like Fig. 26 will probably be found very useful; the

FIG. 29.

general tendency in planing is to get the opposite corners too low, and if those corners of the apparatus are pushed down, the same error as that on the wood is shown exaggerated, and the remedy suggested by slightly pressing on the highest corners until the surface is level.

Digitized by Google

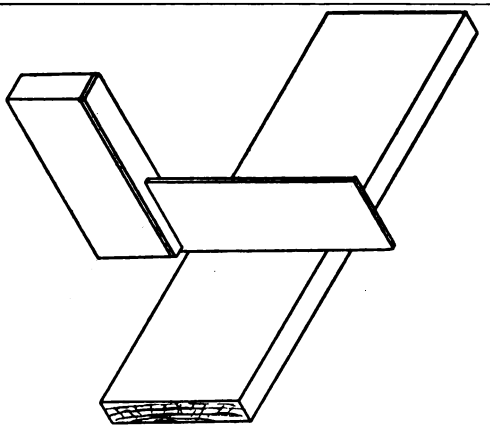

FIG. 31.

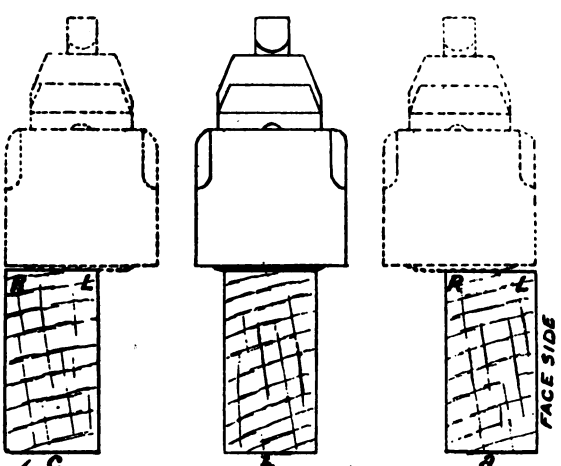

FIG. 33.

C

When the surface is quite true the face mark should be put on, and the nearest edge to the mark planed. (It is usual to mark the right-hand edge as it lies on the bench.) When the wood is thick enough it may be planed against the stop, but if not, placed in the vice.

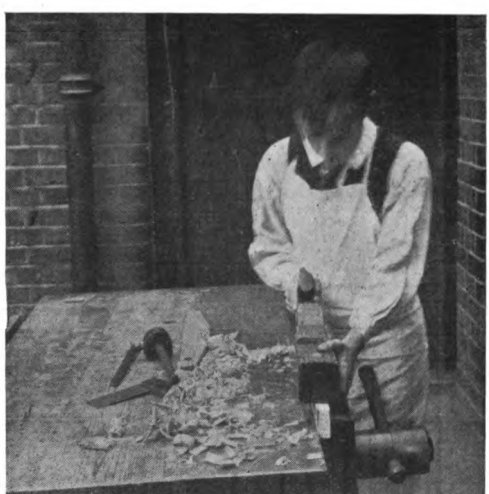

FIG. 32.

Hold the plane for edge planing as in Fig. 32, the fingers being underneath to form a gauge. Fig. 33 will explain the way in which a shaving may be taken off one edge without touching the other; "*a*" shows the cutting iron on the right-hand side, leaving no iron on

Digitized by Google

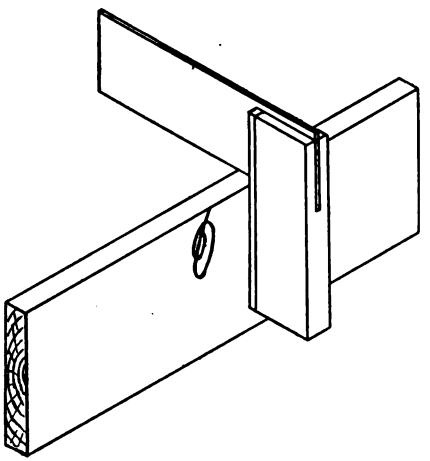

FIG. 34.

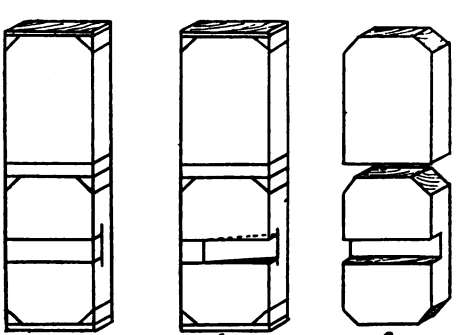

FIG. 35.

Digitized by Google

the left; a shaving would come off the whole width if the plane were held as at "*b*," and the order is reversed at "*c*." The tests for the edge should be with the straight edge and try square (Fig. 34); when finished place the mark on, and this leaves the wood ready for gauging to width. Set the gauge to $1\frac{3}{4}$in. and gauge as in Fig. 22,

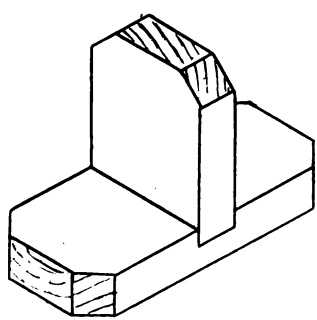

Fig. 36.

then plane to the line, testing after every few shavings as in Fig. 34. The last operation is planing to thickness. Gauge as in Fig. 13 on both edges, and carefully plane to both lines, using the try square held as in Fig. 31 for a test.

The completion of the model is only a matter of careful marking out and sawing. Fig. 35 shows order of work and Fig. 36 the finished exercise; no difficulty should be experienced in this part of the work. The corners are, of course, pared vertically with a wide chisel (Fig. 37).

Digitized by Google

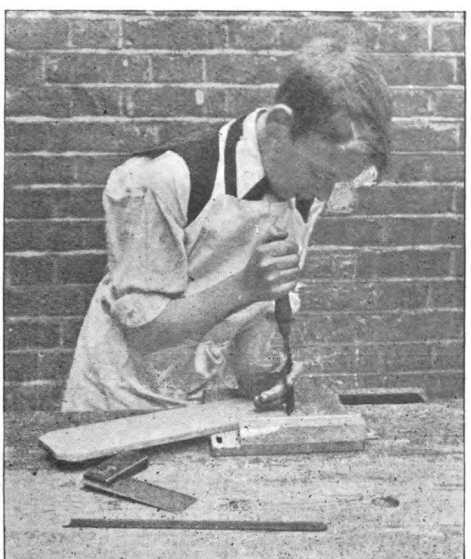

FIG. 37.

Digitized by Google

EXERCISE 6.

A Letter Rack. (Fig. 39).

Drawing.—This should not prove more difficult than previous drawings. The plan, front and side elevation are given, and one of the upright pieces (Fig. 41) is given as an extra drawing exercise.

Benchwork: *Materials.*—Basswood 15in. by 3¼in. by ⅝in., and wide chisel 1¼in.; bradawl and some ¾in. brads.

Method.—The wood must be accurately planed to size, and then the marking-out carefully done; commence by marking-off a little waste, then one of the short uprights, then a little more waste, and the middle upright, more waste, and the third space will be taken up with the base, and leaving just enough for the other upright (Fig 40). The three grooves must be marked on the base, and their depths carefully gauged to ⅛in.; now saw the sides of the grooves with the wood lying on the sawing board, and afterwards place in the vice and pare the waste out. In holding it in the vice the value of the long length of wood will be felt, and which should only be cut into pieces when the grooves are finished. Carefully mark the corners where they are to be taken off, and holding the chisel vertically, pare gradually down the line. To fix together, put the shorter pieces in their places, and turning the wood upside down, bore just through the base with a fine bradawl (Fig. 42), about ½in. away from each end, and drive in a brad, afterwards doing the same with the middle piece.

Digitized by Google

FIG. 39.

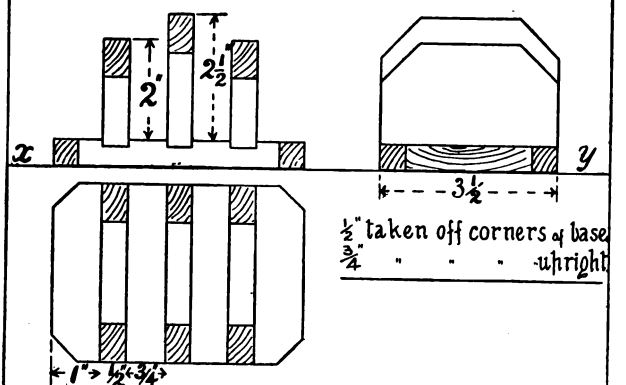

FIG. 40.

Setting out ¼" spaces left between each piece.

FIG 38.

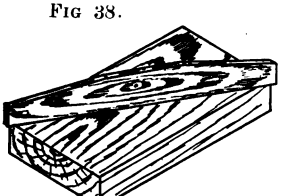

FIG. 41.

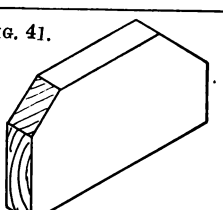

EXERCISE 6.

Digitized by Google

EXERCISE 7.

A Cross Halving Joint. (Fig. 43).

Drawing.—Plan, sectional elevation, and side elevation, with change of ground line, and isometric projection (Fig. 44).

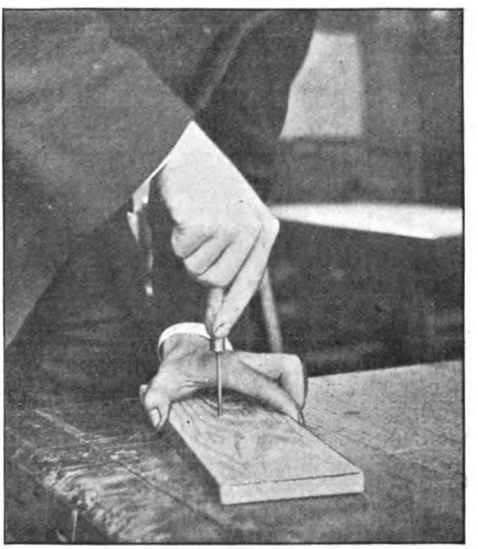

Fig. 42.

Benchwork: *Materials.*—Basswood 11in. by 2in. by 1in.

Method.—The work in this exercise is straightforward. Mark out carefully (Fig. 45) with one groove from the face edge, and the other from the opposite

Digitized by Google

FIG. 43.

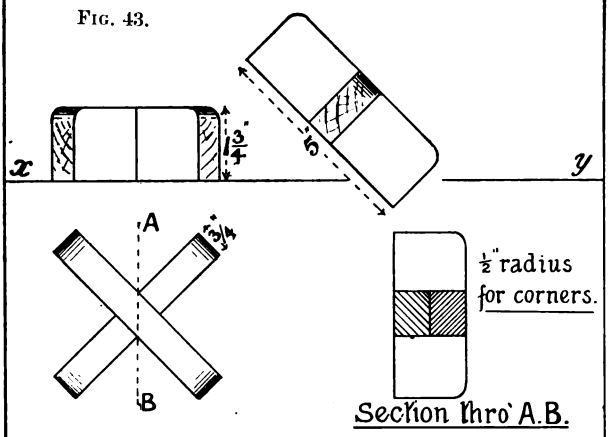

FIG. 45.

Method of marking out grooves.

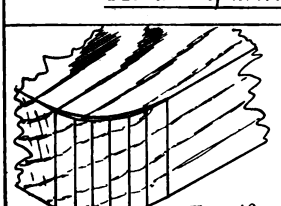

FIG. 46.

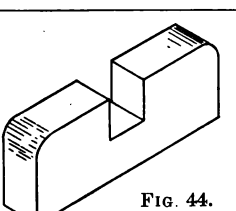

FIG. 44.

EXERCISE 7.

Digitized by Google

one; the reason for this is to bring the face edge of both pieces together when the joint is completed. The corners are pared off with a wide chisel, and should not be found very difficult if thin cuts are taken. Fig. 46 shows how to pare the corners in order to get them round.

EXERCISE 8.

A Calendar Stand. (Fig. 47).

Drawing.—Plan, elevations, and isometric projections (Figs. 48 and 49).

Benchwork: *Materials.*—Basswood 11in. by 4½in. by ¾in.

Method.—Plane up the length of wood, and mark out in the way illustrated (Fig. 50). It will be seen that a lot of the work may be done before the wood is cut up into pieces. The long saw-cut down the grain should be sawn with the hand-saw before the wood is divided, the shorter ones sawn with tenon saw, and afterwards no difficulty should be encountered, with the exception of the curved top, which is new, but is really only a development of the paring on the corners of the previous exercise; a little of the waste may be sawn off, but it may be pared off quite as quickly if a sharp chisel is used. The nails should be driven in to suit the holes in the calendar. Finally glue up the joints.

Digitized by Google

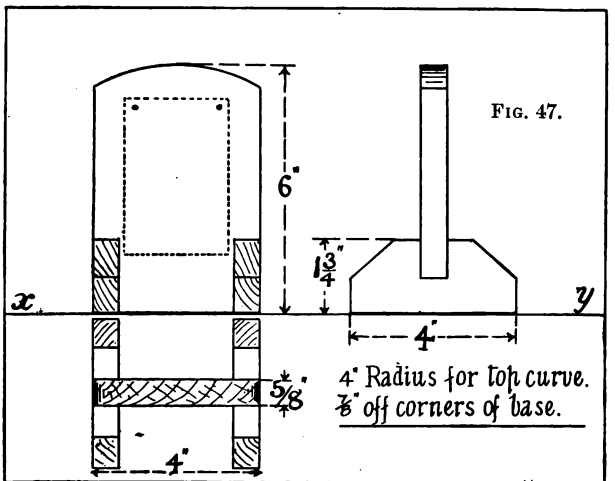

FIG. 47.

FIG. 50.

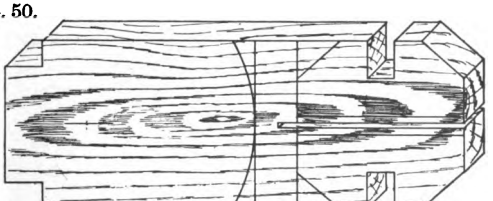

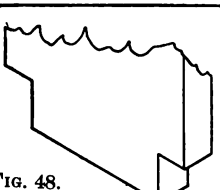

FIG. 48.

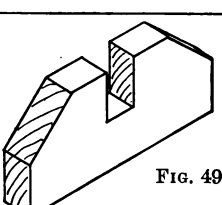

FIG. 49.

EXERCISE 8.

Digitized by Google

EXERCISE 9.

A Lapped Halving Joint. (Fig. 51.)

Drawing.—Plan, elevation, section, and isometric projection (Fig. 52).

Benchwork : *Materials.*—Yellow pine and basswood, 11in. by 2in. by 1in.

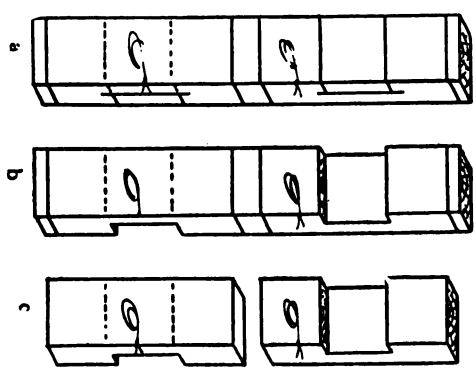

Fig. 53.

Method.—This joint, although it looks simple, requires a lot of care in making, especially in marking out and sawing; attention should be given to the illustration of the stages of work (Fig. 53), a little pressure should be required to fit it together, not more than can be exerted by the hand.

Digitized by Google

FIG. 51.

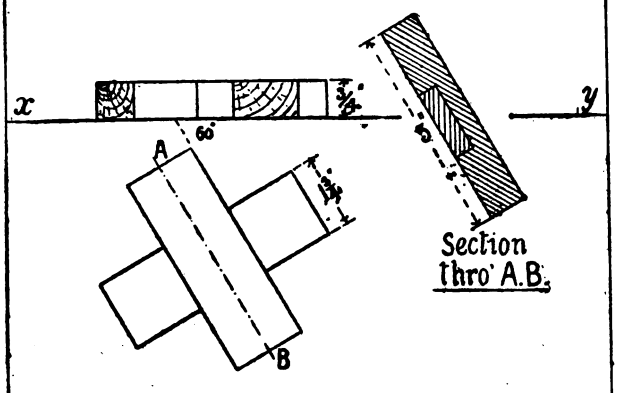

FIG. 52.

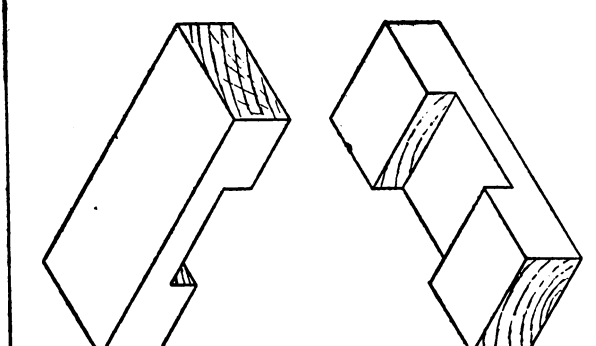

EXERCISE 9.

Digitized by Google

EXERCISE 10.

A Brush Rack. (Fig. 54.)

Drawing.—Plan, elevations, and isometric projection (Fig. 55).

Benchwork: *Materials.*—Satin walnut, 18in. by $2\frac{3}{4}$in. by 1in.

Method.—Plane up the whole length, with both edges quite square, then gauge off the width of pieces, and saw between the lines with the hand-saw. Now plane the sawn edges of the strips to gauge lines, and it will then be easy to mark off all the grooves in pairs, and cut them out before the pieces are sawn apart. There is nothing very difficult in this exercise, and is really designed to give more practice in the halving joint.

Digitized by Google

FIG. 54.

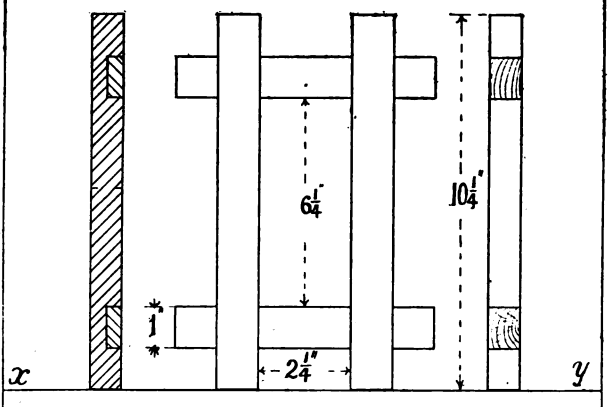

FIG. 55.

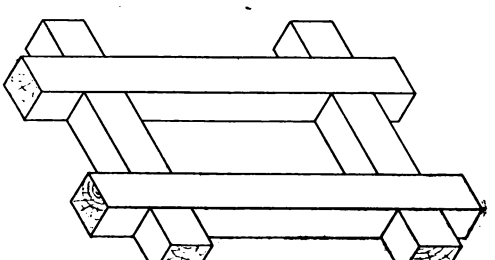

EXERCISE 10.

Digitized by Google

EXERCISE 11.

A Dovetail Halving Joint. (Fig. 56.)

Drawing.—Plan, elevations, section, and isometric projection (Fig. 57).

Benchwork: *Materials.*—Pine or basswood, 10in. by 2¼in. by 1¼in.

Method.—Plane to size, and as this is a joint where it is hardly advisable to mark out completely, one part must be finished first, thus the dovetailed end is the one commenced with. Mark it out accurately, and saw the wide cut across the grain, then place the wood in the vice, so that one of the slanting lines is upright, saw this very carefully, and in order to ensure a good fit a slight amount of bevel should be given, this can be done by starting on the wrong side of the line and finishing on the right side, no more than this should be given, for owing to the shortness of the cut, a very little out of square makes a difference, which would hardly be noticed if the cut were very much longer. When both slanting cuts have been made and the waste carefully cut off, the dovetail should be placed in position, and a line marked each side (Fig. 58). To get a good fit only requires careful sawing and paring in the groove so marked out.

Digitized by Google

FIG. 56.

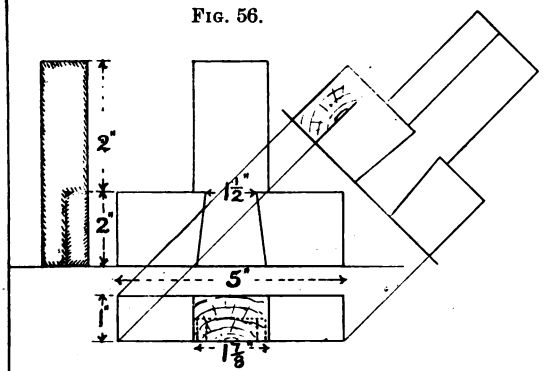

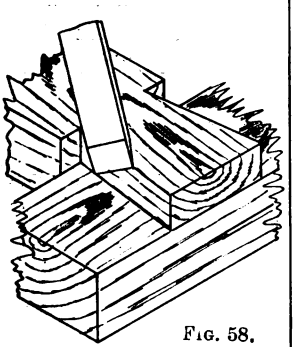

FIG. 58.

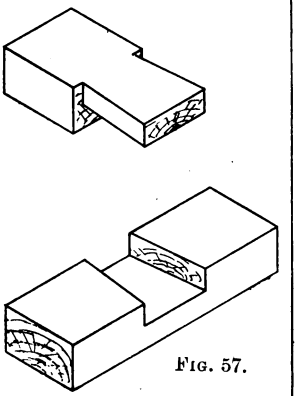

FIG. 57.

EXERCISE 11.

D

Digitized by Google

Examination Test. (FIG. 59.)

Yellow pine, 12in. by 2in. by 1in. Plane up to size, carefully mark out with a bevel set to the required angle.

Supplementary Models. (FIGS. 60 and 61.)

These are given to suggest the kind of exercise likely to prove useful in cases where some finish the course before the others, and where it is found that some particular exercise is too difficult.

The matchbox-holder illustrated at Fig. 60 is a very simple and attractive model, while the rack for keys, Fig. 61, is more difficult, owing to the inlaid pieces.

Digitized by Google

FIG. 58.

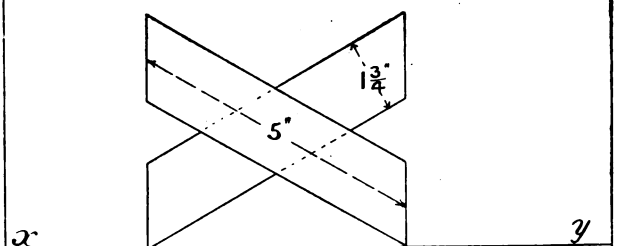

FIG. 59.

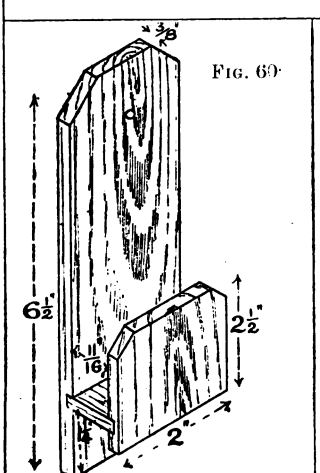

FIG. 61.

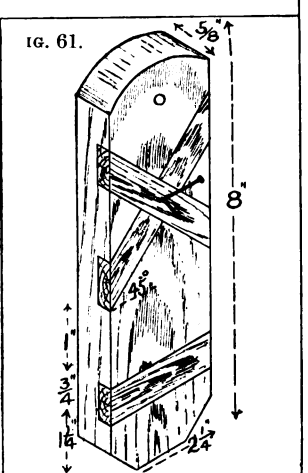

EXAMINATION TEST & SUPPLEMENTARY MODELS.

Digitized by Google

CHAPTER II.

SECOND YEAR COURSE.

EXERCISE 12.

The Tongue and Groove and Stopped Housing Joints. (Fig. 62.)

Drawing: *Materials.*—Half-inch Imperial drawing board and tee square, ruler, set squares, etc.

With the commencement of the second year's course of work it will be found advisable to use the drawing board and tee square. The practice given by the continued manipulation of the rules and set squares throughout the first year will have proved very valuable in training the fingers.

The plan, elevation, sectional elevation, and isometric projection (Fig. 63), should be drawn.

Benchwork: *Materials.*—Yellow pine or basswood, 12in. by $3\frac{1}{2}$in. by 1in.

Method.— Plane to given size, and mark out (Fig. 64), placing the grooved piece in the middle, and the pieces which fit in them, at each end. Gauge grooves to depth, and starting at the end which has been marked for the tongue, treat it like a groove with one side, which should be sawn down, and then pared out with a chisel; now cut out the groove belonging to it, and

Digitized by Google

FIG. 62.

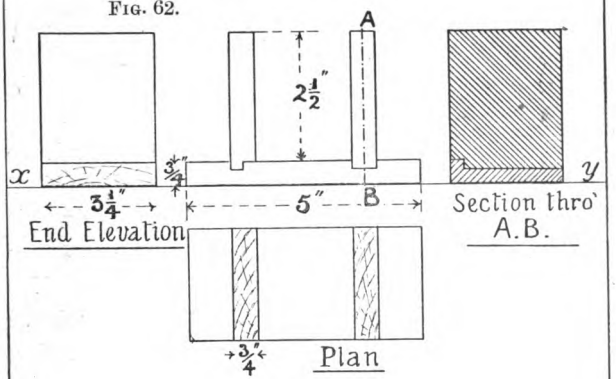

FIG. 64.

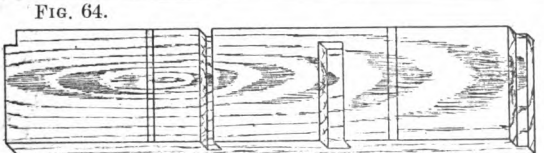

Showing method of marking out.

FIG. 65.

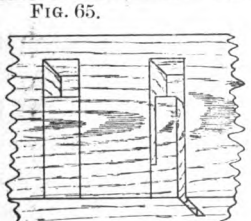

Showing 1st & 2nd stages of cutting stopped housing groove.

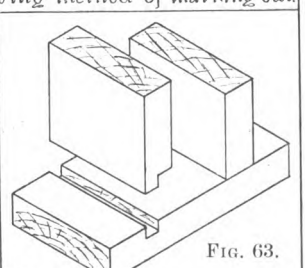

FIG. 63.

EXERCISE 12.

Digitized by Google

this is all that is necessary for the tongue and groove joint. The other will be more difficult (Fig. 65); a hole must be mortised the depth of the groove, at the end, and should be done by a $\frac{3}{4}$in. chisel driven in across the grain, and across the groove at spaces of about 1-16th in. apart. It will not be difficult to remove the waste, and then if the tenon saw is placed on the end of the line enough play will be given it to start, but the whole saw-cut can only be made by means of short cuts. When this is done on both sides remove the waste, and cutting out the notch from the piece which fits in, the wood now only requires cutting up and each part fitting together.

EXERCISE 13.

A Pencil Box. (Fig. 66.)

Drawing.—The plan, elevations, sections, and isometric projection (Fig. 67).

Benchwork: *Materials.*—Satin or black walnut, 11in. by 7in. by $\frac{1}{2}$in., and a spokeshave.

Method.—In this case it is advisable to plane up the wood first before cutting it into the various sizes, and when this is done saw two strips for the sides of the box, the length allowing one side and end in each piece. These two pieces should be marked in pairs, and all possible grooving cut before sawing apart. Finish the ends with a chisel, fit together and glue up. Now plane up the base to width, and mark out the ends, paring to the line with a wide chisel, then

Digitized by Google

FIG. 66.

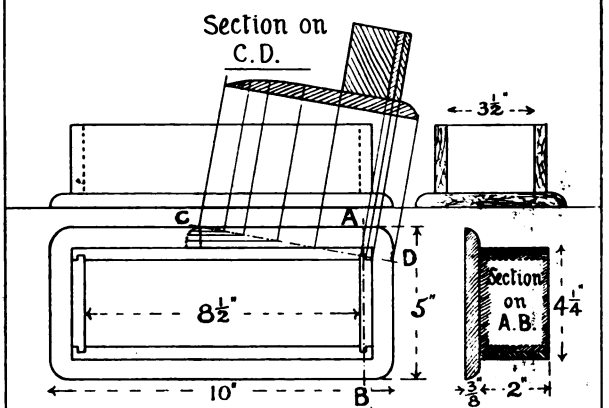

FIG. 67.

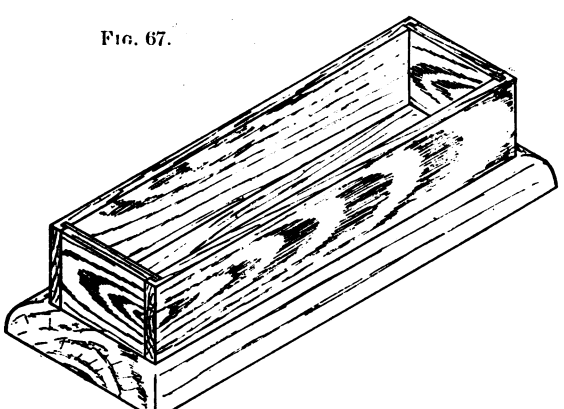

EXERCISE 13.

Digitized by Google

running a pencil line $\frac{1}{4}$in. away on face and edges, plane to the round with a smoothing plane, and the ends with a spokeshave, a tool which should be held tightly in both hands as illustrated (Fig. 68).

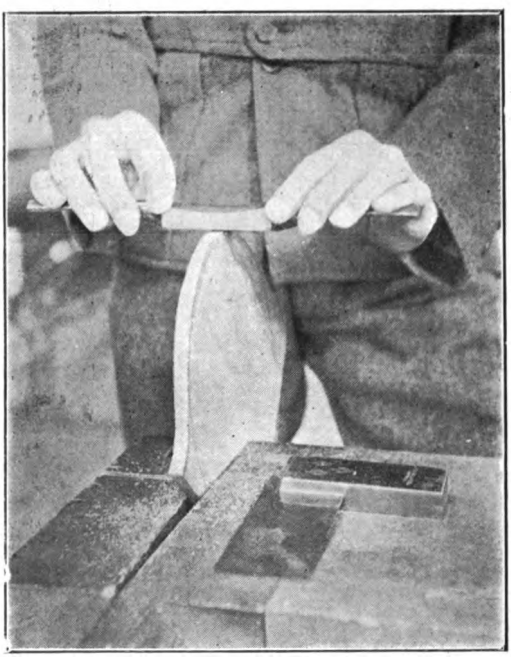

FIG. 68.

To complete, run some glue round the lower edges of the box sides and place in position, putting the box under pressure until dry.

Digitized by Google

FIG. 74.

Digitized by Google

EXERCISE 14.

Mortise and Tenon Joint. (Fig. 69.)

Drawing.—Plan, elevation, sectional elevation, section, and oblique projection (Fig. 70).

Benchwork: *Materials.*—Pine or basswood, 12in. by $1\frac{1}{2}$in. by $1\frac{1}{4}$in., and mortise chisel.

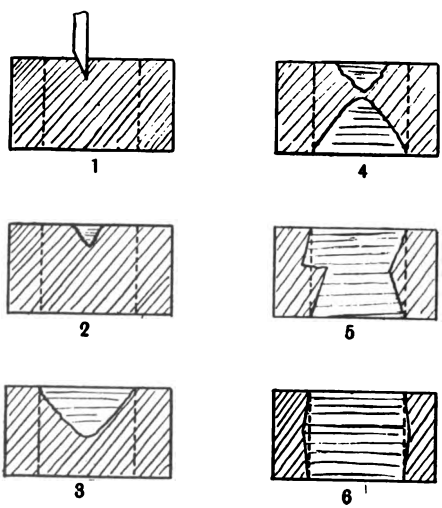

Fig. 75.

Method.—This is the most commonly used of woodworkers' joints, and one that, although simple in construction, contains a considerable amount of difficulty. The marking out (Fig. 71) should be done with the mortise gauge, the movable teeth being set to

Digitized by Google

FIG. 69.

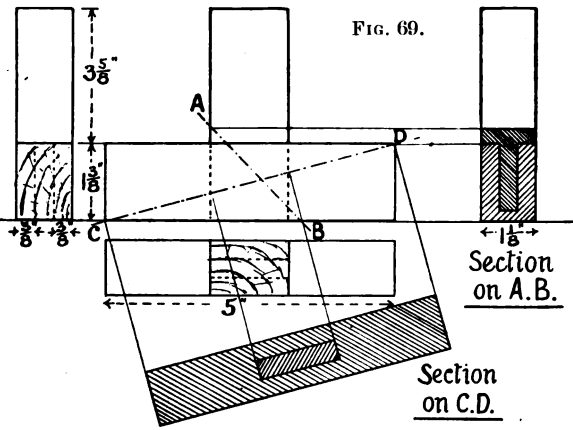

FIG. 71.

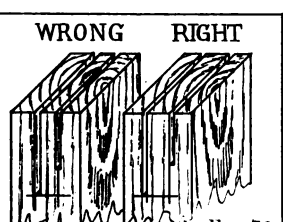

FIG. 72.

FIG. 70.

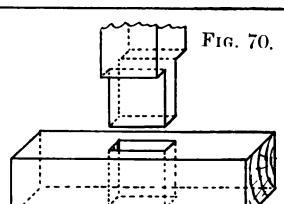

EXERCISE 14.

Digitized by Google

the width of the mortise chisel (Fig. 73), and then adjusted to the right position. First cut the tenon (Fig. 72) and then the mortise. Hold the chisel as shown in the illustration (Fig. 74), and follow the steps shown in the next diagram (Fig. 75). The first shows the first cut, the next is taken by reversing the chisel, and this will result in a triangular piece being cut away. Continue this, reversing the chisel after

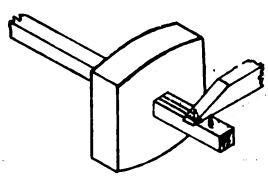

FIG. 73.

each cut until the length of the mortise is reached, the hole being now about halfway down. Now turn the wood over, repeat the operations from the commencement, and this should take the hole through. Now the chisel is placed against the end of the mortise and driven halfway down, the bevel edge being towards the centre, and sufficient undercut given. The last two stages illustrate this slightly exaggerated.

Digitized by Google

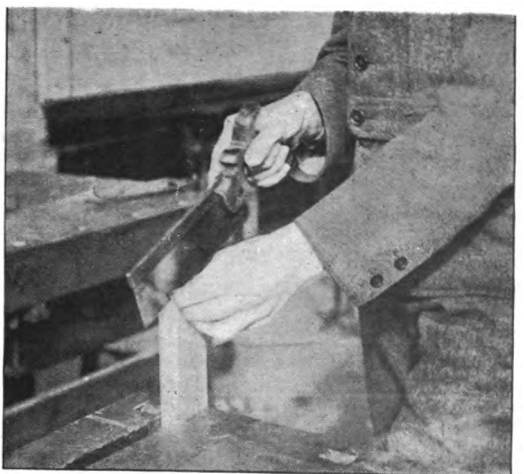

FIG. 84. (EXERCISE 17).

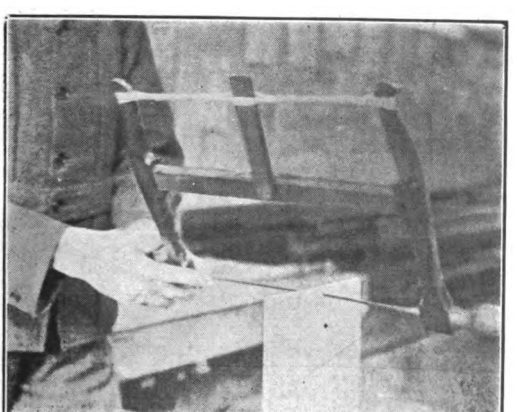

FIG. 92. (EXERCISE 19).

Digitized by Google

EXERCISE 15.

A Thermometer Stand. (Fig. 76.)

Drawing.—Plan, elevations and section, and isometric projection (Fig. 77).

Benchwork: *Materials.*—Walnut, either Satin or Black, 10in. by 9in. by 1in., and a 1in. scribing gouge.

Method.—Plane up the wood, and, after sawing off the $1\frac{3}{4}$in. upright, saw the tenons, shape the end, and make a $\frac{1}{8}$ chamfer on both sides with plane and spokeshave. Mark out the base (Fig. 78), and cut the mortise—care must be taken that the grain runs the length of the mortise; when this is done, the tenon-saw must be used to cut to triangular shape, and then using the gouge as a chisel (Fig. 79), vertically pare to within a little way of the lines, and finish smooth and square with the spokeshave. The corners are left till last, and are pared with a wide, firmer chisel; then everything is ready for finally glueing and fixing together.

Digitized by Google

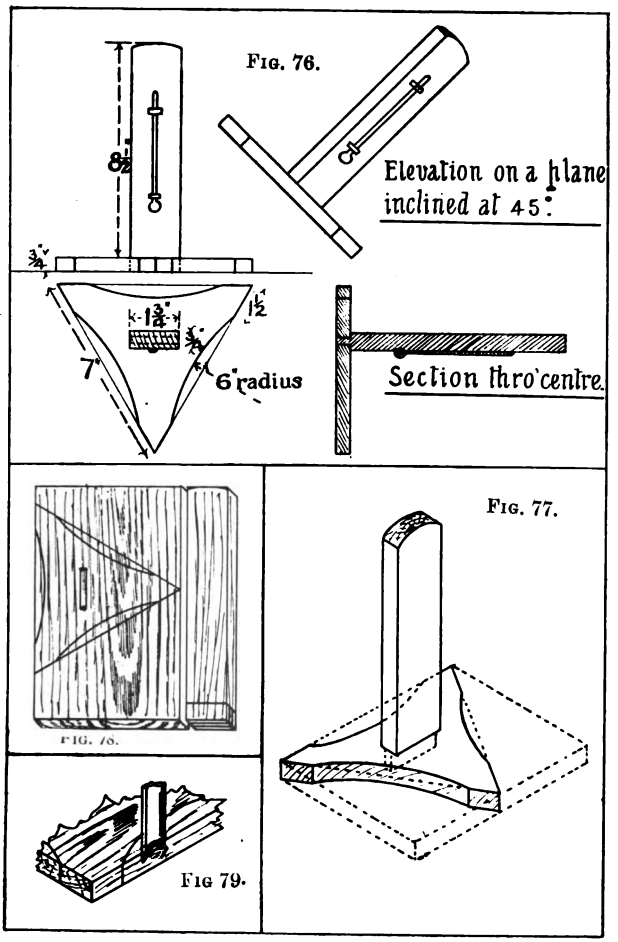

EXERCISE 15.

Digitized by Google

EXERCISE 16.

A Bridle Joint. (Fig. 80.)

Drawing.—Plan, elevation, section, and isometric projection (Fig. 81).

Benchwork: *Materials.*—Yellow pine or basswood, 10in. by 1½in. by 1¼in., and a mortise gauge.

Method.—Plane up to size and mark out (Fig. 82), using the mortise gauge. Set this carefully, the distance between the teeth exactly the same as the middle space in the joint, one-third of the thickness, and so adjust the stem, that the two teeth come in the

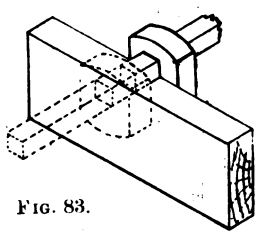

Fig. 83.

middle of the wood; to get this exact, see that the marks made by the spurs coincide (Fig. 83). When the marking is done use the tenon saw to saw down the grain. Start at the far corner and gradually bring the saw along the line, remembering to keep the waste side, and saw with straight and long cuts down to the bottom of the tenon (Fig. 84—p. 53). Great care must be taken, for the slightest amount out of truth will prevent the joint fitting properly. Pare the core out as shown in Fig. 85. The grooves on the side are simple, and require no explanation.

Digitized by Google

FIG 80.

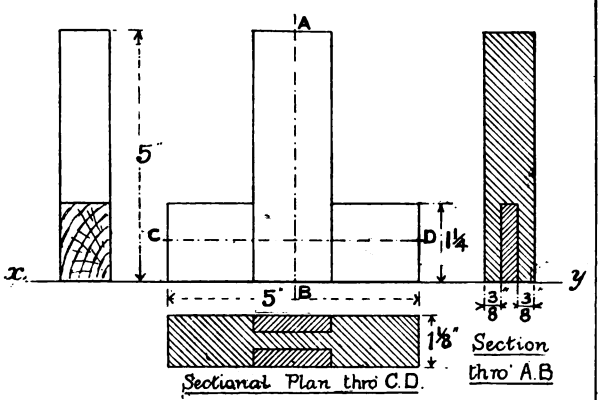

FIG. 82.

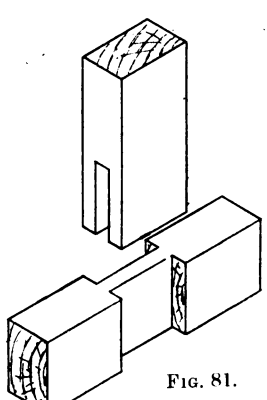

FIG. 81.

EXERCISE 16.

Digitized by Google

EXERCISE 17.

A Try Square. (Fig. 86.)

Drawing.—Plan, elevations, and isometric projection (Fig. 87).

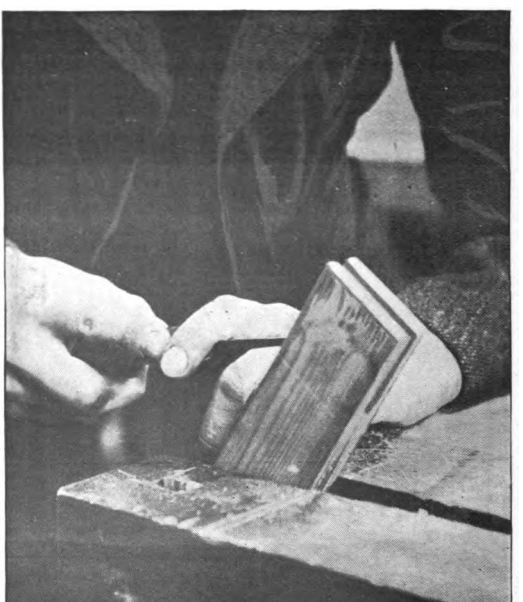

Fig. 85.

Benchwork: *Material.*—Black walnut, 12in. by 2in. by 1in.

Method.—First plane all the wood to size, $1\frac{3}{4}$in. wide and $\frac{3}{4}$in. thick, mark out on one end, and cut the open mortise. From the other end must be sawn the strip

Digitized by Google

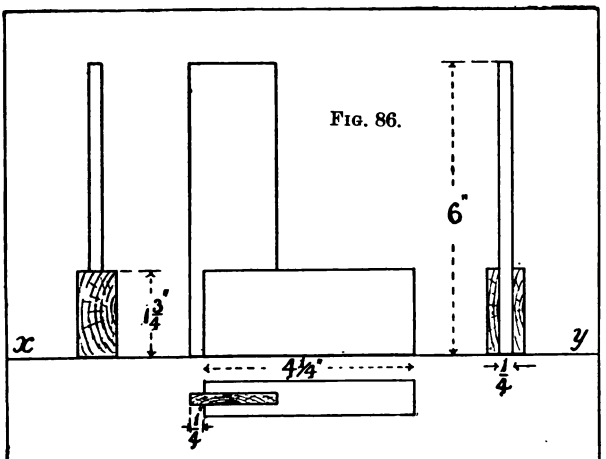

FIG. 86.

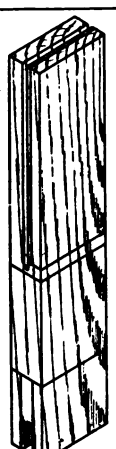

FIG. 88.

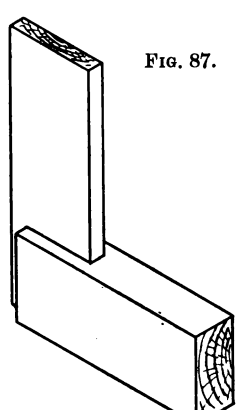

FIG. 87.

EXERCISE 17.

Digitized by Google

for blade (Fig. 88), and a gauge set to the thickness, $\frac{1}{4}$in. should be run from the face side, the hand-saw being used to saw it off. Care should be exercised not to go too near the line, for if the cut is uneven it will render the planing more difficult. If the joint has been accurately cut the blade will fit quite square, and may be glued up.

EXERCISE 18.

A Cogging Joint. (Fig. 89.)

Drawing.—Plan, elevations, sections, and isometric projection (Fig. 90).

Benchwork: *Materials.*—Pine or basswood, 10in. by $2\frac{1}{4}$in. by $1\frac{1}{4}$in.

Method.—In marking out this joint (Fig. 91), it will be found advisable to use the mortise gauge when making the lines along the face. The difficulty is, of course, in cutting out the two notches. The tenon saw must be used to saw down to the diagonal, but after that the chisel only can be relied on; treat the work as a groove, and carefully run the chisel edge along the gauge line to a depth of $\frac{1}{8}$in., then pare that amount out as in a stopped groove, keeping a firm hold of the chisel to avoid cutting past the line; if before each cut the chisel is used to cut across the fibres there will be no further difficulty in making the square notch.

Digitized by Google

FIG. 89.

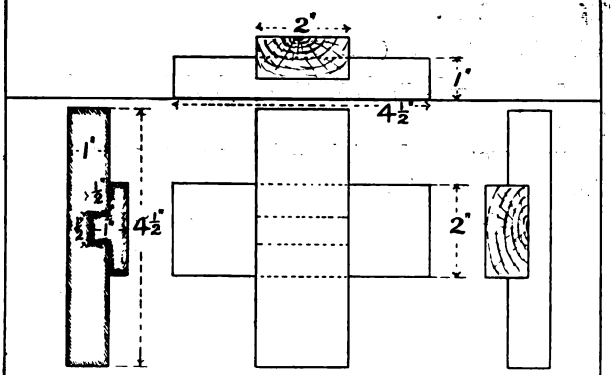

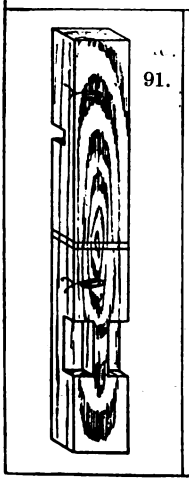

91.

FIG. 90.

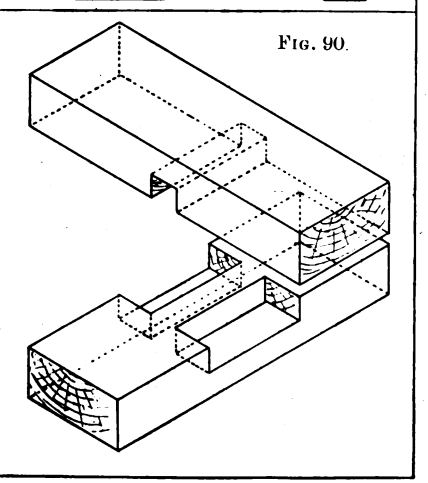

EXERCISE 18.

Digitized by Google

EXERCISE 19.

A Watch Stand. (Fig. 93.)

Drawing.—Plan, elevations, and oblique projection (Fig. 94).

Benchwork: *Materials.*—Basswood or satin walnut, 9in. by $6\frac{1}{4}$in. by $\frac{3}{4}$in.

Method.—As all the pieces can be cut from the one length of board it will be better to plane it up first, and then cut up into the various pieces (Fig. 95). Start with the joints, make them as in the previous exercise, and then shape out the top piece with bow-saw and spokeshave. If the alternate model (Fig. 94) is taken then the round hole must be cut out with bit and gouge before the shaping is commenced. This would make a nice stand for a Bee clock. The small curves are made first with a $\frac{3}{4}$in. bit, then the bow-saw (Fig. 92—p. 53) used to saw nearly to the curve, and care should be taken that the saw-cut is at right angles to the face; the spokeshave must be used to clean up the edges, and when this is finished, pare the straight parts on each side with a sharp chisel, this will ensure a clean edge. Now the chamfering should be done, and after finally cleaning up, all the pieces should be glued together.

Digitized by Google

FIG. 93.

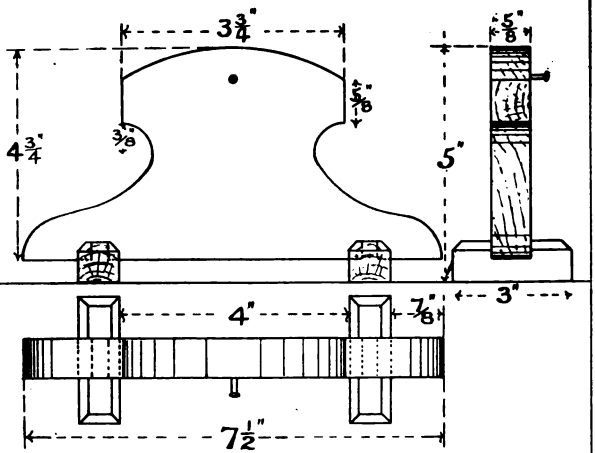

FIG. 94.

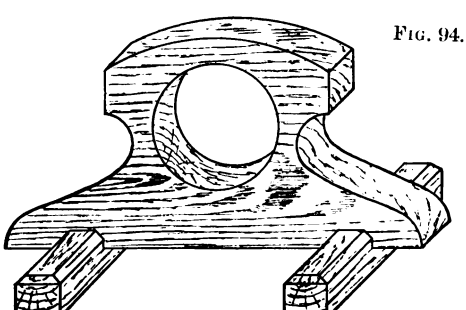

EXERCISE 19.

Digitized by Google

EXERCISE 20.

A Double Mortise and Tenon Joint. (Fig. 96.)

Drawing.—Sectional plan, elevations, section, and isometric projection (Fig. 97).

Benchwork: *Materials.*—Pine or basswood, 10in. by 2in. by 2in.

Method. — Practically the same method used in making the mortise and tenon joint applies in this case, with, of course, an increased amount of care in marking out. One set of gauge lines for both mortise and tenon must be done before the gauge is altered. Other than this difference the mortising and sawing is the same. This joint will prove a very good test of sawing, for unless the work has been quite accurate the joint will not fit.

Digitized by Google

FIG. 96.

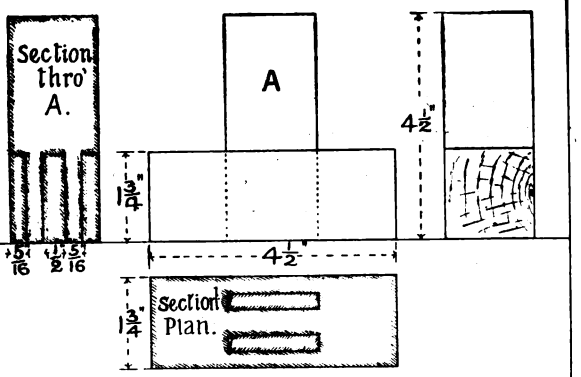

FIG. 95.

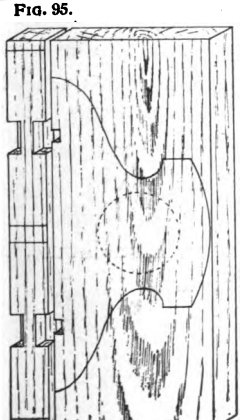

FIG. 97.

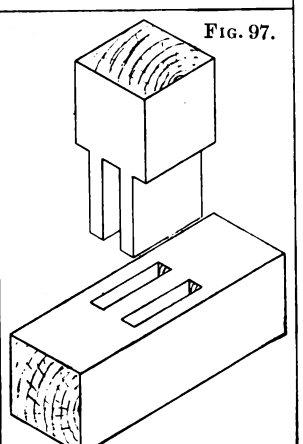

EXERCISE 20.

Digitized by Google

EXERCISE 21.

An Inkstand. (Fig. 98.)

Drawing.—Plan, elevation, and sections.

Benchwork: *Material.* — Walnut, 20in. by 7in. by $\frac{3}{4}$in.

Method.—Plane up the length of wood, and mark out as much as possible (Fig. 99). No dimensions are given of the mortise for the inkwell, this should be made to actual measurement. The ellipse should be left till last, so as to give a sufficient length of wood in the vice while shaping the upper part. It will be advisable to cut the mortise before the ellipse is commenced, the rectangular piece of wood being better to hold. Fig. 100 shows the double mortise and tenon joint used in fixing the large upright; it will entail very careful work. Fig. 101 shows how the smaller piece is housed in; this should be done with small cuts, taking great care not to go outside the line.

Digitized by Google

FIG. 98

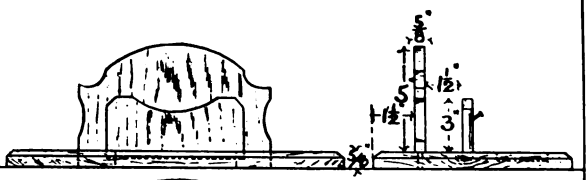

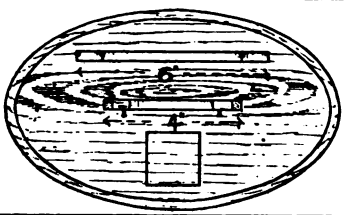

Size of ellipse 8"×6"
" " large upright 5"×6"
" " small " 3"×4"
Thickness of wood 5/8"
Size of chamfer 1/4"
Depth of mortise 5/16"
Width of tenons 1 1/2"

FIG. 99

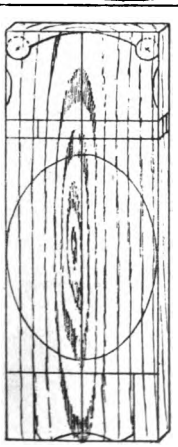

FIG. 100.

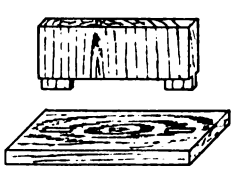

FIG 101.

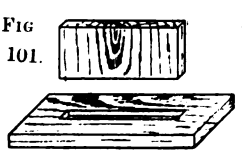

EXERCISE 21.

Digitized by Google

EXERCISE 22.

A Haunched Mortise and Tenon Joint. (Fig. 102.)

Drawing.—Plan, sectional, and side elevations, and isometric projection (Fig. 103).

Benchwork: *Materials.*—Pine or basswood, 10in. by 2 in. by 1¼in.

Method.—This style of mortise and tenon is used when the mortise is near the end of the wood, and where the open joint would not be suitable, and it requires considerable care in making. In marking out (Fig. 104), leave as much waste as possible at the end where the mortise comes, to avoid risk of splitting out the fibres, and mortise through for the narrow part of the tenon, leaving the small gap until last when finally fitting together. In sawing the tenon, saw down all three lines with the grain before cutting the shoulders. If the joint is made in this way, with the practice gained in making the previous ones, a first-rate fit should be the result.

Digitized by Google

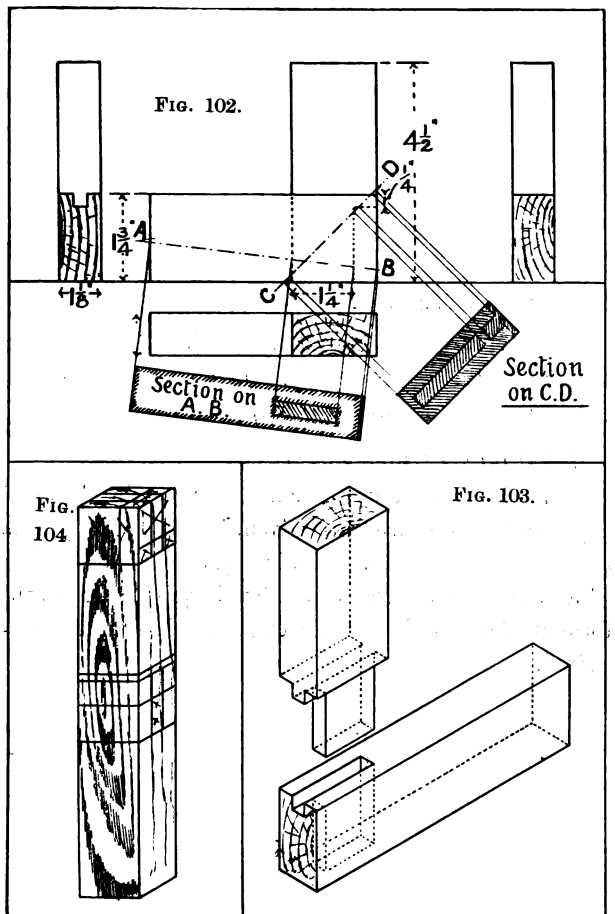

EXERCISE 22.

Digitized by Google

Examination Test. (Fig. 105.)

Yellow pine, 12in. by 2in. by 1in. Plane up to size, carefully mark out while in one piece, and cut out the grooves before sawing apart.

Supplementary Exercises.

Fig. 106 gives a useful stand for use in chemical experiments; no sizes are given, but the proportions should be adhered to. Fig. 107 gives an illustration of a more difficult form of the bridle joint, and should form useful practice at the end of this course if required.

Digitized by Google

FIG. 105.

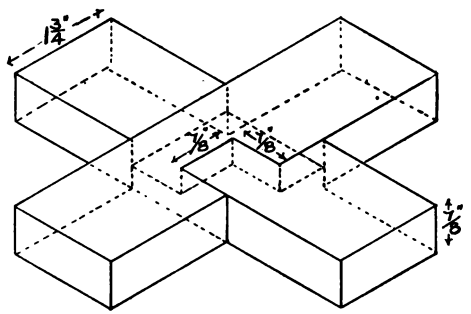

FIG. 106

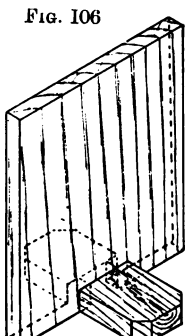

FIG. 107.

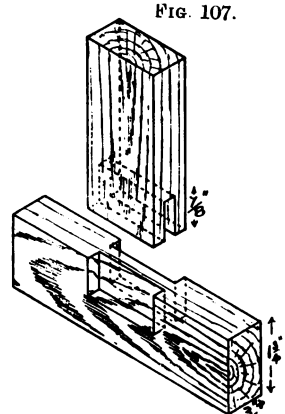

EXAMINATION TEST & SUPPLEMENTARY EXERCISES.

Digitized by Google

CHAPTER III.

THIRD YEAR COURSE.

EXERCISE 23.

Dovetail Joint. (Fig. 108.)

Drawing.—Plan and elevation, section and isometric projection (Fig. 109).

Benchwork: *Materials.*—Pine or basswood, 11in. by 4¼in. by 1⅛in. and a bevel.

Method.—Plane up the wood, and saw carefully into two equal pieces, 5½in. long. Use these sawn ends for the joint, and take one piece and mark out the pins (A, Fig. 109), ⅛in. from each end mark a line across which will be the centre of the end pins, then divide the intervening portion into three equal parts, the lines dividing these spaces will be the centre of the other pins. The width of the wide part of the pin is usually about half the thickness of the wood, and the narrow part about half that size. The width of the broad part in this case would be ½in. and the narrow part ¼in., so mark off each side of the centre of pin ¼in., and for narrow part ⅛in., and of course only on one side of the end pins; square all lines down to gauge lines, and mark lines across the end with

Digitized by Google

FIG. 108.

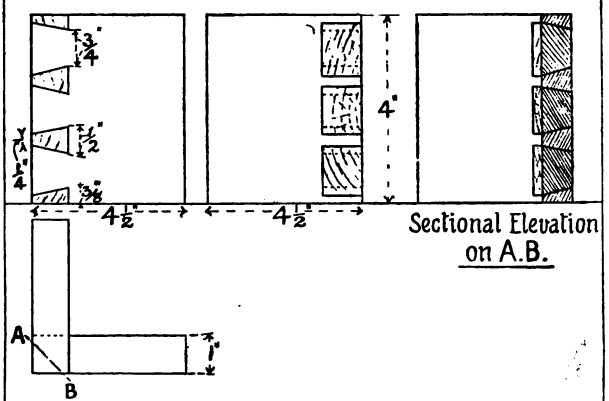

FIG. 110.

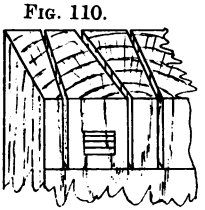

FIG. 111.

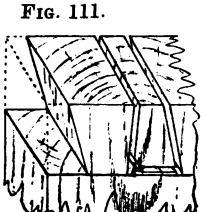

FIG. 109.

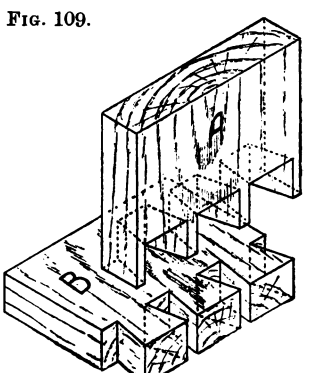

EXERCISE 23.

F

Digitized by Google

a bevel. Saw down the lines with the tenon-saw, and then mortise the waste out, using a chisel as wide as the narrow part (Fig. 110); when the pins are finished place the piece containing them on the side of the other piece, and mark out their shape (B, Fig. 109). Square these lines across the end, and saw down to depth, taking care to keep on waste side of the line; to take the waste out, put the bow-saw in the cut, and saw a little away from the line (Fig. 111), afterwards paring out with the chisel. Fit the joint together, and plane off the surplus ends.

EXERCISE 24.

A Vernier. (Fig. 112.)

Drawing.—Plan, elevation, and isometric projection (Fig. 113).

Benchwork: *Materials.*—Black walnut for back, 15in. by 2½in. by ⅜in.; mahogany for fronts, 18in. by 1in. by ⅜in.; sycamore for slide, 6in. by 1in. by ⅜in.

Method.—Plane up the wood for back to 2¼in. wide, and ¼in. thick, finishing with trying plane to get the surface perfectly true, then plane up the mahogany to ¼in. thick, with both edges true, and after gauging 1in. from each edge, run pencil lines ⅛in. away on face side and from both edges, and plane down to the line, this will form the inside bevel; when this is finished saw the strips apart and plane to lines. Now before the

Digitized by Google

FIG. 112.

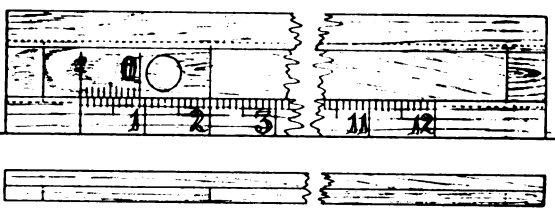

FIG. 113.

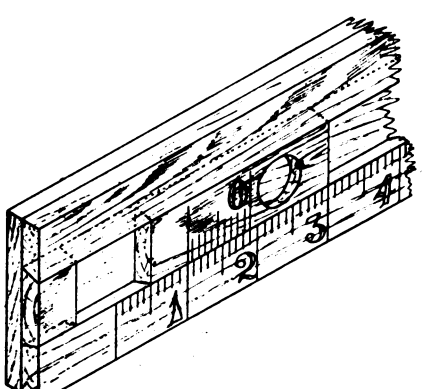

EXERCISE 24.

Digitized by Google

slide can be fitted these strips must be glued and screwed in their place, and the waste ends sawn off and kept until after the slide is fitted, and then fixed in their places. The slide should run easily along the groove, and the round hole bored right through. The marking will take a lot of care, and if the vernier is to be of any use, must be accurate.

EXERCISE 25.

Model of Geometrical Planes. (Fig. 114).

Drawing.—Plan, elevations, and isometric projection (Fig. 115).

Benchwork: *Materials.*—Basswood, 2ft. 6in. by 8in. by 1in.

Method.—The exercise brings into use the haunched double mortise and tenon joint, and requires very careful work to get each plane square. The joints are marked out and cut in a similar way to the double mortise and tenon in Exercise 21, Fig. 100, but with the addition of the haunch (Fig. 116). Two short pieces of hard wood will be required to form the hinges, and should be screwed on when both planes are end to end; this will allow enough "play" for the vertical plane to stand on the horizontal one, and also will permit of them being folded together.

Digitized by Google

FIG. 114.

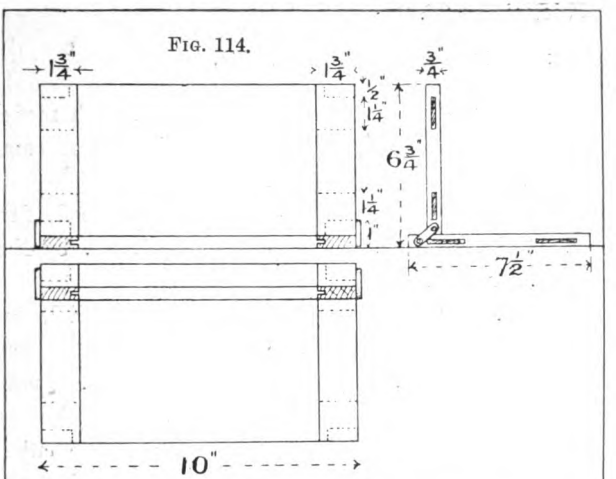

FIG. 116.

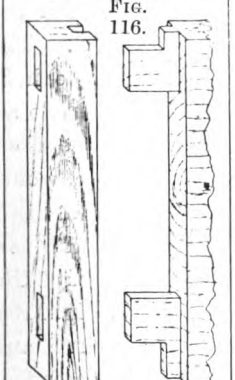

FIG. 115.

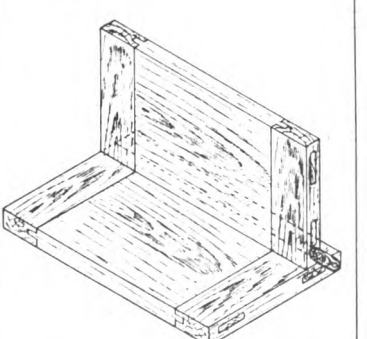

EXERCISE 25.

Digitized by Google

EXERCISE 26.

Geometrical Models. (Fig. 117).

Drawing.—The plan and elevation of each model should be drawn, and the oblique projection of completed set mounted (Fig. 118).

Benchwork: *Materials.*—Pine or basswood, 2ft. 6in. by 7in. by $1\frac{3}{4}$in. for models, and 2ft. 6in. by 4in. by $\frac{3}{4}$in. for base.

Method.—First plane up the length of material, saw it down, then glue the face sides together in the way shown (1, Fig. 119), this will form a 3in. square prism. When the glue is set, clean up, and after paring one end smooth and square, cut off the cube; next draw the diagonal on the end, and with the tenon-saw cut away most of the waste, and finish the pyramid with smoothing plane (1, Fig. 119). The sawn pieces should be used to form a box to hold pyramid in while finishing the base. Next set out an octagon on the end, and run the lines along the sides, and plane down to them, and cut off the octagonal prism 4in. long, and clean up the end with a chisel. Find the centre of the remaining piece, and with saw and smoothing plane shape the octagonal pyramid 4in. long; saw it off and clean up the base (2, Fig. 119). Now describe on both ends of remainder a circle and carefully plane down, placing a piece of 1in. wood at the end of vice to hold it. When this is done mark off the length of cone, and in the same way as in making

Digitized by Google

FIG. 117.

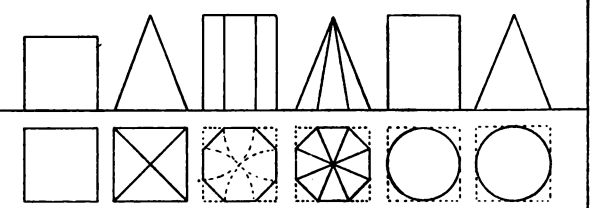

FIG. 118.

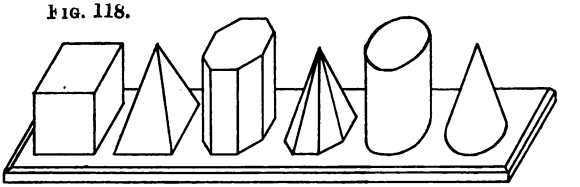

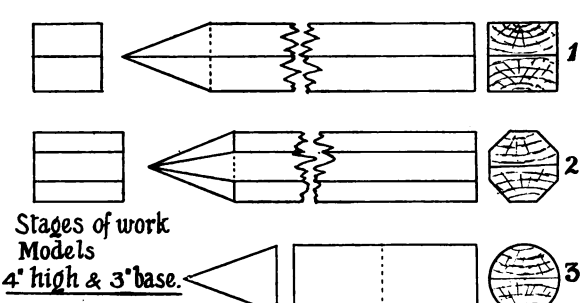

FIG. 119.

EXERCISE 26.

Digitized by Google

octagonal pyramid cut away the wood to a point, finally cutting it off, as well as the cylinder (3, Fig. 119). The base must be planed up, chamfered, and recesses cut to a depth of $\frac{1}{8}$in. to take each model.

EXERCISE 27.

Lap Dovetail. (Fig. 120).

Drawing.—Plan, elevation, and isometric projection (Fig. 121).

Benchwork: *Materials.*—Pine or basswood, 11in. by $4\frac{1}{4}$in. by $1\frac{1}{8}$in.

Method.—Mark out the joint in the opposite manner to the common dovetail (Fig. 109), but of course leaving the amount to lap over. The sockets require carefully cutting out, and saw with tenon and bow saws. The pins are marked out and cut, taking out the waste in the same way as the notches were cut in the cogging joint.

Digitized by Google

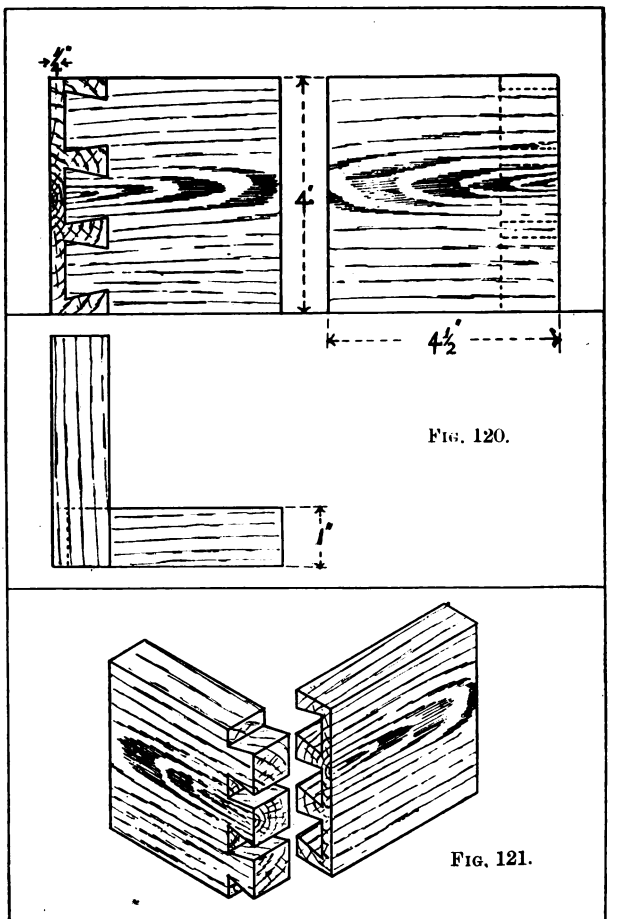

FIG. 120.

FIG. 121.

EXERCISE 27.

Digitized by Google

EXERCISE 28.

A Test Tube Stand. (Fig. 122).

Drawing.—Plan, elevations, section, and isometric projection (Fig. 123).

Benchwork: *Materials.*—A hard wood, preferably 1ft. 8in. by 8in. by $\frac{3}{4}$in. Teak, and a firmer gouge.

Method.—After planing up the wood, divide it into the required pieces, mark out and cut the lap dovetails, and then the mortise and tenon joints at the top, next bore the holes for test tubes ($\frac{3}{4}$in.), and with a firmer gouge hollow out a place for the tubes to stand in, if a firmer gouge of the same curve as the required hole is held upright, turned round, and gradually slanted outwards, a round shallow hole will result. The sides may now be shaped, first sawing out with bow-saw, and finished with spokeshave before corners are cut off. The pegs should now be prepared, enough wood will be left from the piece to make them, and the best way would be to saw a $\frac{1}{2}$in. strip from one edge and cut it up into lengths after the whole strip is planed up to $\frac{1}{2}$in. square. Holes must now be mortised to receive them, and must be cut out with a chisel a little under the size of pegs in order to ensure a good fit.

Digitized by Google

FIG. 122.

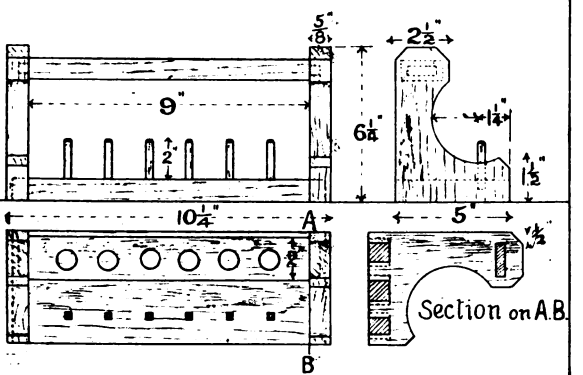

FIG. 123.

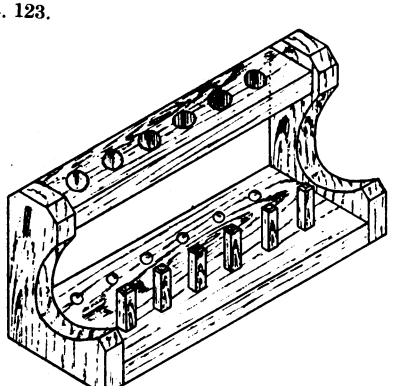

EXERCISE 28.

Digitized by Google

EXERCISE 29.

A Tusk Tenon. (Fig. 124).

Drawing.—Plan, elevation, and isometric projection (Fig. 125).

Benchwork : *Materials.*—Pine or basswood, 10in. by $2\frac{3}{4}$in. by $1\frac{1}{4}$in.

Method.—Plane up material, and run centre line on both sides; mark wood in half, and on one end set out the tenon; set the gauge to proper sizes, and mark off position on both tenon and mortise; if these sizes are both marked together there will be less chance of going wrong. Saw out tenon first, cut it off, then cut mortise, and fit together. Afterwards make the peg, and cut a hole in the tenon, allowing a little space inwards to draw the joint tight.

Digitized by Google

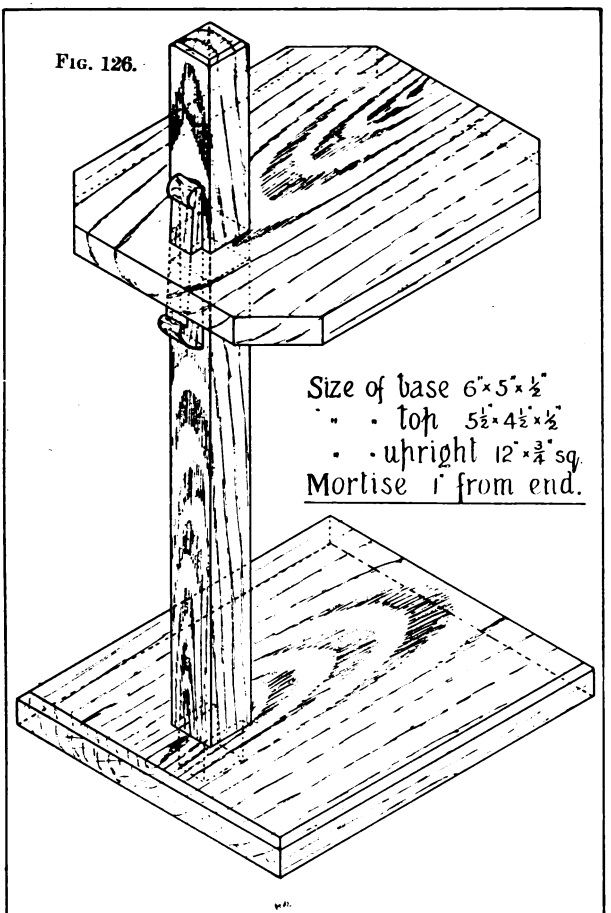

FIG. 126.

EXERCISE 30.

Digitized by Google

EXERCISE 31.

A Dovetail Joint. (Fig. 127).

Drawing.—Plan, elevations, section, and isometric projection (Fig. 128).

Benchwork : *Materials.*—Yellow pine, 11in. by $2\frac{1}{4}$in. by 1in.

Method.—The success of this exercise depends on accurate marking out and sawing, for the slightest amount out of truth will show and spoil the look of the finished work. All sawing and chisel work should be finished before pieces are cut apart.

Digitized by Google

FIG. 129.

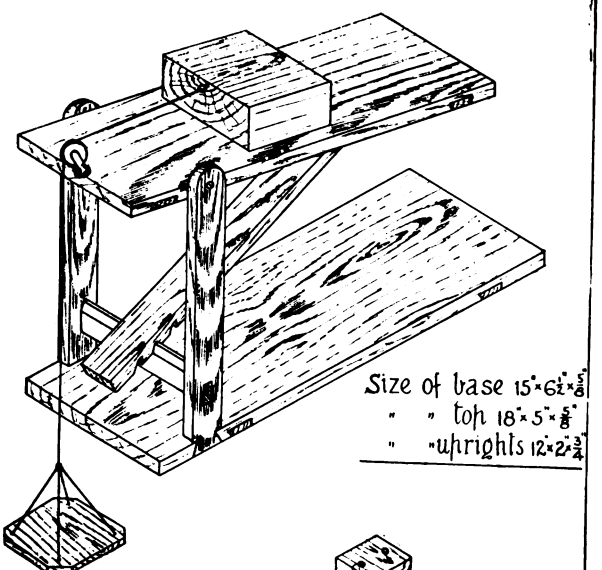

FIG. 130.

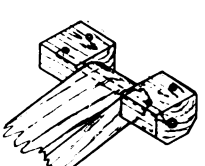

FIG. 131.

EXERCISE 32.

Digitized by Google

EXERCISE 33.

A Marking Gauge. (Fig. 132).

Drawing.—Plan, elevation, and isometric projection (Fig. 133).

Benchwork: *Materials.*—Beech, 5in. by $2\frac{1}{2}$in. by $\frac{7}{8}$in. for stock and wedge; 11in. by $\frac{7}{8}$in. by $\frac{7}{8}$in. for stem.

Method.—Mark out the stock, and cut the mortise, afterwards boring holes for small curves, and finishing with bow-saw and spokeshave. When stock is completed, fit the stem in carefully, and finally make and fit the wedge, bore the hole for spur with a fine bradawl, and insert the nail, sharpening afterwards with a file.

Digitized by Google

FIG. 132.

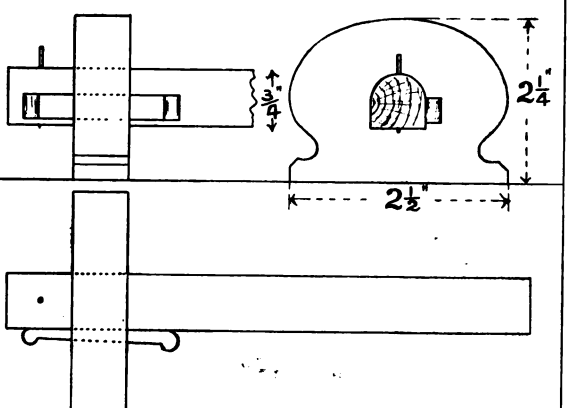

FIG. 133.

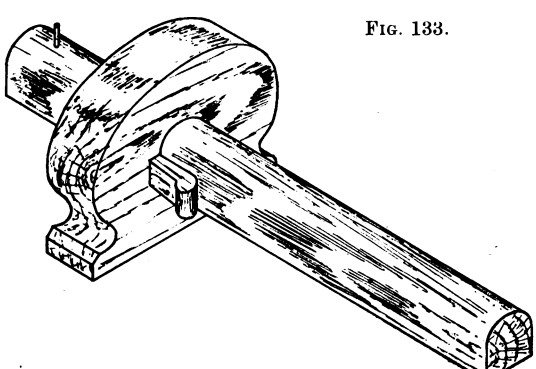

EXERCISE 33.

Digitized by Google

Examination Test. (FIG. 134).

Yellow pine, 12in. by 1⅝in. by 1⅝in. Plane to size, 1⅜in. square, and mark out with mortise gauge, and carefully cut the grooves and pins.

Digitized by Google

FIG. 134.

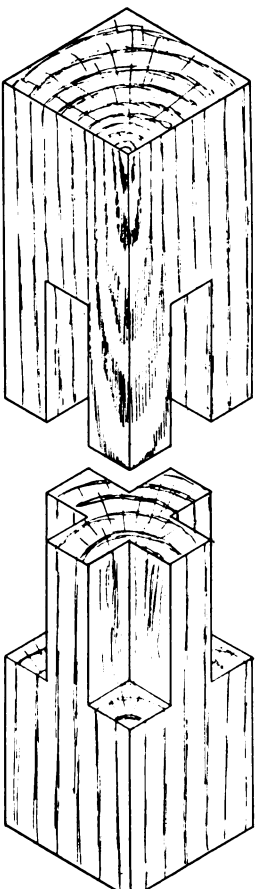

EXAMINATION TEST.

Digitized by Google

Supplementary Models.

Figs. 135 (a box) and 136 (a finger plate), give two examples of suitable inlaid work. In both cases the inlay is in thin wood, and goes really through it, but if a piece of drawing paper is glued underneath, and a piece of thicker wood glued to that, the difficulty of cutting the thin piece will be overcome, and the use of a router avoided. The pieces should all be planed, fitted and glued up before fitting in. It is not satisfactory to fit each piece in separately.

Digitized by Google

Fig. 135

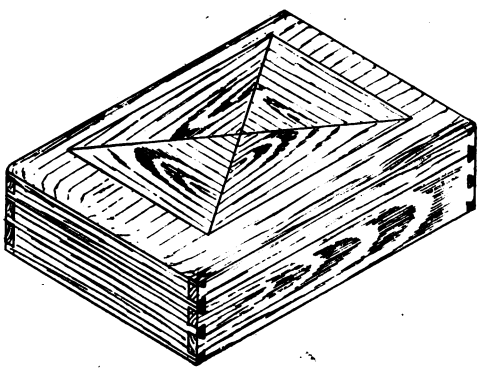

Fig 136

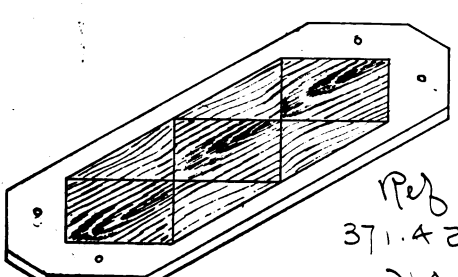

Ref
371.42
H4

New York Public Library
Rivington St. Branch,
61 Rivington Street.
CIRCULATING DEPARTMENT

36722

SUPPLEMENTARY MODELS.

Digitized by Google

CHAPTER IV.

FITTINGS AND FURNITURE.

One of the greatest helps to successful work are good fittings. There should be a place for everything, and yet in how many places are the tools and work piled up in odd cupboards and corners, in disorder.

A proper and orderly arrangement of apparatus is imperative if perfect discipline is required, and the best way to arrange the room is often a difficult problem to solve. Not only is an orderly room a pleasure to work in, but it has a great educational value in appealing to the boys' sense of order.

Some rooms lend themselves to a little artistic effect, and there is no reason why that effect should not be given. Why should the manual training room so often look like a whitewashed barn? A little thought and work would soon impart to the plainest-looking room a much more interesting appearance.

Arrangements of Benches.—As much space as possible should be left between benches. Figs. 137—140 show various arrangements. The benches themselves should be as solid as possible, and whenever possible fixed to

Digitized by Google

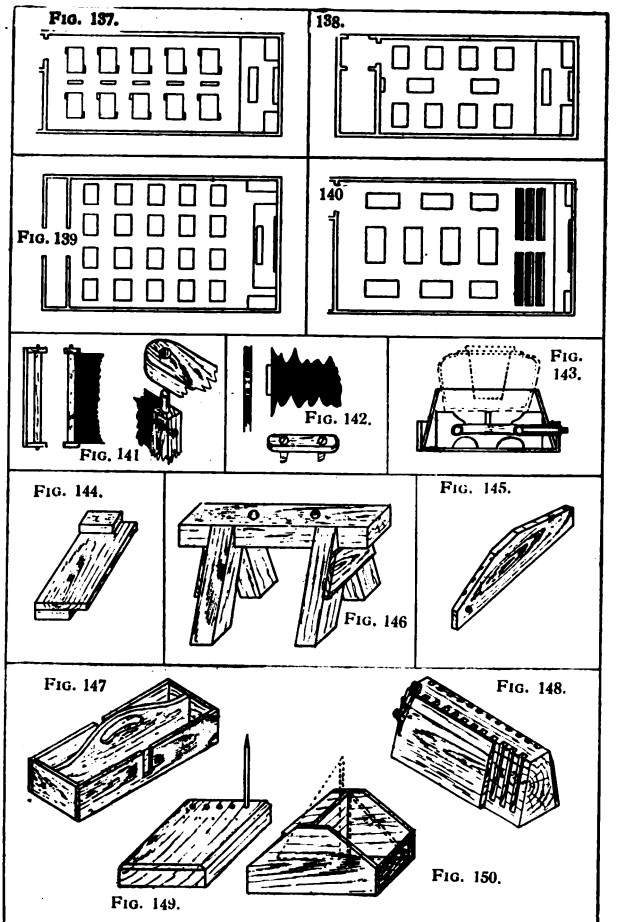

822744

Digitized by Google

the floor, and provided with Parkinson's instantaneous grip vice, and a stop adjusted by a cam.

Tool Racks.—These should be constructed to hold all the tools needed by each boy, and nothing could be better than the style adopted generally at the London School Board centres (Fig. 151). A rack of this description is far away in front of drawers, the tools being kept in much better condition, always in full view, and very easy to get at. The various tools which are not in such general use should be arranged on the lines shown in the photographs (Figs. 152 and 153), and a very nice effect can be given to the room by a display similar to these. The method of displaying tools has great advantages over a cupboard, for if occasionally the tools are rubbed over with a vaseline rag they will not rust, they are always accessible, and a glance round the room will at once show if there are any missing.

Blackboards.—These, always being in use, should be hung in prominent places, and by adopting the plan of hinging them so as to make them revolve, a great saving of space is effected, for by being able to quickly turn the board it saves having too many boards, and bring both sides quickly into use. Figs. 141-2 explain the ways of doing this, and of fixing hinged boards for showing the planes of projection; this arrangement should be fitted to each board, and either one or two spare boards kept ready to hinge and hook on.

Cupboards may be dispensed with if shelves fitted

Digitized by Google

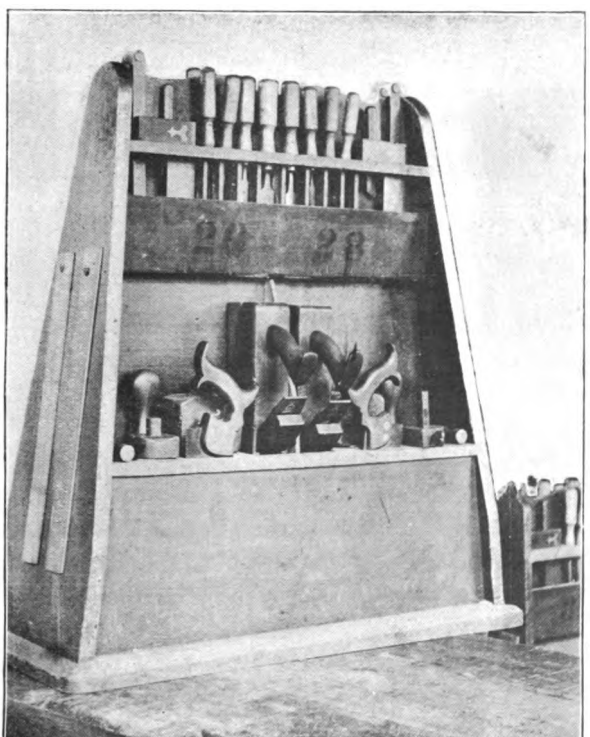

FIG. 151.

Digitized by Google

with doors are provided, but a glass-fronted cupboard for exhibiting specimens would be an ornament.

Shelves.—These should, as far as possible, be fitted with doors or movable fronts, and labelled with names of their contents, a separate compartment being kept for each class, with divisions for work and drawings.

Sawing and Boring Stools.—Figs. 146 show the recognised design for these necessary pieces of furniture, the hole in the end being useful both in sawing and boring by providing a means of using the holdfast.

Storage of Timber.—Whenever possible the timber should be kept in a separate room, as it is always difficult to keep it tidy, but if this is impossible shelves should be fixed near the ceilings or out of the way, and only a small quantity kept in the room in a rack built in a corner or some other convenient place.

Gluepot.—This should be placed in a prominent place where the use of it can easily be supervised. There are many ways of heating it, but the one illustrated (Fig. 143) provides a very safe and convenient way, and concentrates all the heat on the bottom of the pot.

Benchhooks (*Fig.* 144) *and Paring Boards* are quite necessary for each bench, and should have their proper place.

Straight Edges should be also provided for each bench, and either hung on the bench or tool-rack. They are best when made of mahogany or walnut about ¼in. thick, and of the design shown in Fig. 145.

Digitized by Google

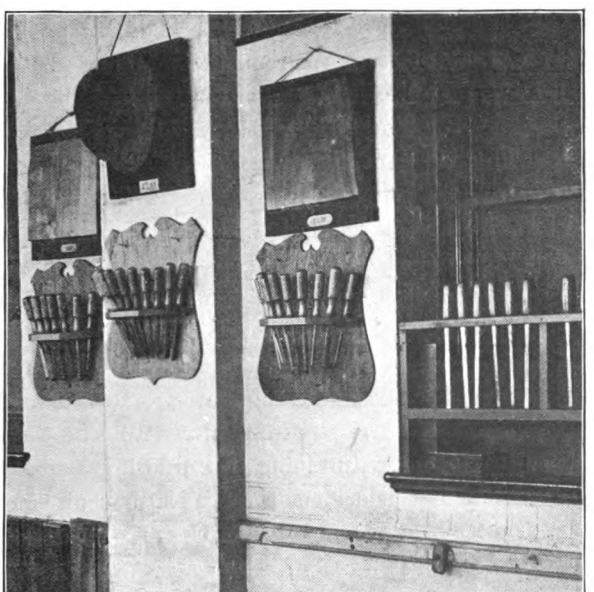

FIG. 152.

Digitized by Google

Brushes for every bench, too, are useful, and leave no reason why the bench should not be left quite clean at the end of each lesson.

Drawing Materials.—Again the necessity of a methodical arrangement presents itself. The drawing board, and tee-square (which should fit under the board), are best fitted in a groove beneath the bench, they are out of the way and it saves the room that a lot of stacked boards would take. The set squares should be kept in a case like Fig. 150. Pencils which are generally more often lost than not, if arranged like Fig. 149 will pay for the little trouble involved in making the stand. Rulers again will keep their edges longer if arranged in a box constructed on the lines of Fig. 147, and there is no method of holding compasses better than that illustrated in Fig. 148. All the above methods greatly economise space and time, and save a deal of wear, for nothing wears drawing materials out so much as throwing them carelsssly into a drawer, not to count the great help in maintaining the orderliness of the room, for when it is evident that a place is provided for each piece of apparatus, bad habits of disorder are never formed.

Digitized by Google

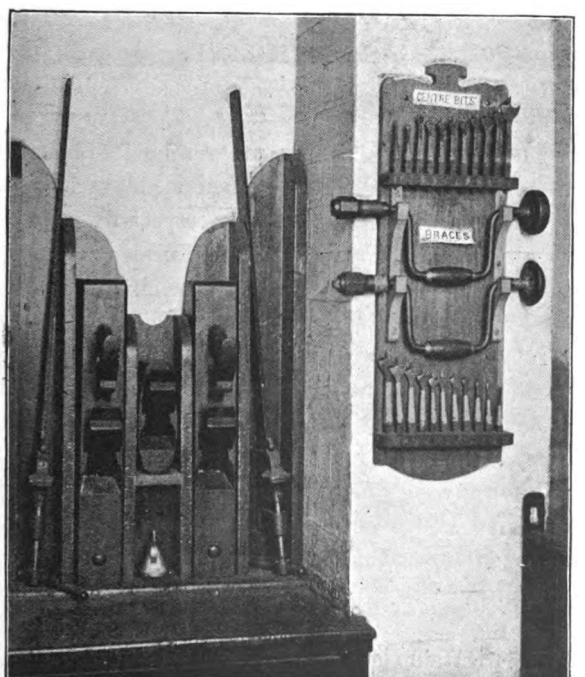

FIG. 153.

Digitized by Google

CHAPTER V.

DISCIPLINE.

There are probably no other school subjects that centre a child's interest so much as the various forms of manual training, and more especially woodwork. It allows full scope to that natural energy which every child possesses. Under these circumstances the need for severe discipline should be slight.

A well-organised scheme of work will prove the greatest possible help, in the fact that while the boys are under instruction they should have employment for every minute. It is against a child's nature to be kept still for any length of time without something to occupy the mind, and a good scheme would leave no time unoccupied other than a few minutes at the beginning and end of lesson for the distribution and collection of work.

It is certain that the teacher who has the power of turning that natural energy and activity into account has solved the problem of the successful management of children, and when one considers how easy it is to get a boy's whole attention fixed on his work, it is surprising to hear of many cases in which the teacher

Digitized by Google

is deficient in disciplinary powers; of course there are often cases of laziness and wilful inattention which must be treated in other ways, but these may sometimes be traced to an inability to concentrate the brain, indicating a certain amount of weakness, which will be overcome in time, if carefully treated. There are again some children who do not like the work the class is doing, and in order to claim their attention another model should be designed likely to interest them; one thing is certain, that if only a boy's interest can be gained, and his whole attention rivetted to his work, he is not at all likely to become troublesome.

Example.—This is another great aid to discipline, and one not sufficiently studied. We see the effect on the child of his home life, and the value of the example set by his teacher cannot be over-estimated; for if the instructor is kind, good-tempered, fair in his judgment, refined and straightforward, his pupils cannot fail to derive some good from their association with him.

A teacher cannot think of his own life only, he has in his charge, only for a few hours a week perhaps, the men of a future generation, but in that time he is able to train habits of carefulness, order and truthfulness; and he may prove a greater power in the moulding of their character than he may ever imagine. His actions and words are constantly being noted, and used for and against him continually, and great care should be taken that no wrong impression should be given.

Digitized by Google

Praise and Censure.—How often does a teacher forget to praise a pupil's work or behaviour when it is deserved? and yet he would expect it himself; for no man would care to remain long in any position for which he was never given any credit, never congratulated on the results gained; and much more is that feeling to be worked on in children. A well-timed word of praise or censure will do a great deal in attaining a good discipline; but it must be used with great discretion, for too much of either is worse than none at all, and it will be found that a good disciplinarian will effect as much with a little censure, as some men will do with much harsher treatment.

Emulation.—This spirit may be used to great advantage with many children, but it must be very carefully fostered. It will be for good if guided by a kind and generous mind, but may have quite the opposite effect by training a feeling of contention if the guiding mind is other than broad in its views.

Some authorities have written against it, and consider that it would be infinitely better if never used, but Currie in his *Common School Education* says: "As a principle consciously directed by the enlightened teacher, it is a power in the school, capable of attaining great results, without injury to the moral feelings of those stimulated by it," and indeed if the spirit be well-trained while the boy is at school, there is no knowing the benefits he may derive from it in his future life.

Digitized by Google

Punishment.—It cannot be denied that in some instances impositions and corporal punishment are necessary, but it takes a long experience to tell when to inflict bodily pain as a punishment. It should only be resorted to as a last extremity.

Often sufficient punishment can be inflicted by means of impositions, deprivation of playtime, and detention after school, but each case should be considered on its merits, and punishment often avoided by placing the offender out of temptation under direct observation.

To some children the loss of their playtime is much more to them than bodily pain, and if this is accompanied by some drill or physical exercise it will have a good moral effect.

When other means have ended in failure, corporal punishment must be resorted to if the discipline is to be maintained. Currie says: "In admitting that the action of this punishment will be found salutary in certain cases, we hold that in a good system of discipline it will be altogether a rare and exceptional resort. It may be well to recapitulate the means of influence whose use should make it so; the general work of the school should be made interesting by appealing to the pupil's intelligence and engaging his activity. Then the teacher should deal with him generously, regulate exactions by the power of performance; manifest a desire to have the pupil on pleasant terms with himself rather than to catch at his

Digitized by Google

failings, and find in them opportunity for censure; appeal to his better feelings, and rely on them as long as they appear sufficient; concern himself with his general welfare and happiness, and when difficulties arise, deal with him openly, justly, and resolutely. He may thus hope to establish for himself a strong personal ascendancy over his pupils which will make itself felt to the furthest limits of their duty, and in his school a healthy public opinion which will dispose all to be guided by him, to regard not only his regulations but his wishes as their law, to covet his approbation as their highest pleasure, and to shrink from his censure as the source of their greatest uneasiness. If, in addition to all this, he sets before them a good and consistent example he has in operation a series of educative influences which will, in the general case, keep the moral machinery of the school in sound and vigorous operation, and which will keep punishment in the subordinate place which belongs in education to corrective stimulants as the remedy for exceptional and abnormal acts and dispositions. When he has done all this the minor penalties still stand between him and chastisement. Let him not make up his mind to the use of chastisement as a matter of course because thousands before him have done so, but let him act on the conviction that other means of influence and restraint are open to him which, as many have found sufficient for their purpose, he may find sufficient for his. Let him aim at prudence, patience, firmness,

Digitized by Google

and dignity in administering these; prudence, to adapt them in kind and degree to the various offences he has to check; patience and self-control to restrain the passion of the moment, and to exhaust the influence of the minor penalties his law allows him; firmness, to disregard the promptings of partiality on the one hand, and of caprice or humour on the other; and dignity which shall banish from the judgment-seat everything like a flippant and jesting spirit in the serious work of discipline. Let him keep note of his experience in the use of all his influence, and let him study the character of children that he may gain an insight into their motives. The better he knows them the firmer will be his hold over them. He may hope to learn the mechanism of the child's action so well as to obtain almost the complete power of regulating it. He will then be able to retain chastisement as a reserve-force, which is precisely his position of greatest influence. Its power is in the inverse ratio to its frequency of application. Where it is employed for every-day acts it becomes a common thing with a common-place influence, and the result of familiarity with this the lowest of all motives is to weaken or destroy the force of the higher. He uses it best who uses it least, not because, like a servant, he is forbidden to use it, but because with the dignity of a free agent reserving the liberty of its use he has learnt to do without it."

Digitized by Google

CHAPTER VI.

ORGANISATION AND METHOD.

The importance of good organisation and the best methods in teaching cannot be over-rated. It is impossible to design a scheme of woodwork that would meet all cases as the individuality of students or the needs of various districts have to be considered, so every instructor must of necessity be able to adapt and mould the subject accordingly, and must know something of the main principles of organisation and method.

There are many excellent books published on school methods, and valuable hints may be gained from them, but little has been written with regard to teaching woodwork.

Classes.—In many large School Boards, classes of forty boys attend a centre for instruction and these are generally drawn from surrounding schools; the centre is placed in charge of a well-qualified instructor, with an assistant. This places the former in a much more responsible position than if alone with twenty

Digitized by Google

boys, as is usually the case; for he has not only the organisation and disciplining of a larger class, but in many instances the training of his assistant. In most cases this is an excellent thing; it is not only economical, but it gives the assistants a good hold of the work before taking charge of centres themselves.

The large centres are not, however, always as successful as the smaller ones, mainly owing the defective organisation of the work; too much work is often deputed to the assistant, who is perhaps not quite capable of taking the responsibility of unaided work, and in many cases he is placed in charge of the new and dullest boys in the class. Now in a well-conducted centre the instructor would avoid anything of this kind, for he would know that it is the beginners and dullards who need the best teaching, and that is presumably given by the instructor himself, and it is certainly in the beginning that good or bad habits are formed, and a zealous teacher would never lose an opportunity of pointing out the right way to those beginners. The best arrangement is to give the assistant charge of the best boys in the class, those who only need a little guidance, and this would leave more time for the instructor to devote to the younger pupils.

Time-tables.—To ensure punctuality and order, and avoid confusion, time-tables are quite necessary, and it is a fact that certain things are done at stated times, unconsciously train in the boys a sense of order.

Digitized by Google

The time devoted to manual work varies much, from 1 to 2 hours in a grammar school, to $2\frac{1}{2}$ to 3 hours in elementary schools.

Drawing.—This is usually taken first, for several reasons; it may be that new work is required, and enough drawing should always be done to insure a full amount of woodwork; also for the sake of cleanliness, it is better to start with drawing; however clean the room may be the boys cannot help soiling their hands.

In many manual training schemes drawing occupies a very second-rate position, but it is quite as important to grade the drawing as well as the woodwork. As the benchwork increases in difficulty so also should the drawing, but if it is taken regularly there should be no trouble with it.

Great attention must be paid to the preliminary work to ensure a good command over the set square and ruler, and the various drawing tools should be in good order; these should be overhauled at regular intervals, the angles kept true and the edges straight, and most important of all, the pencils should be sharply-pointed. The majority of faulty work in drawings can be traced to blunt pencils, and it is a good plan to have a pencil-sharpening machine, and keep a good stock of ready-sharpened pencils. The use of rubber should be avoided as much as possible. The effect of indiscriminate use of the rubber has quite as bad an effect on the drawing as glasspaper has on benchwork, and the one should be shunned as much

Digitized by Google

as the other. The aim of the teacher should be to get a fine light line at first, and then line in the required parts, if this is done from the first the use of rubber will not be required. A set of the first few exercises should be made double size, and the sections cut through to use on the hinged blackboard. It is also useful to have a few of the ordinary geometrical models, such as the cube and various prisms.

The materials used must be carefully considered, and it is ruinous to good work if common material is used. This is particularly the case in drawing; the lead in the pencil should be of good quality, made by a well-known firm, and preferably should be a H, and the paper which is usually used in the form of books should be a good stout cartridge about 14in. by 10in. The advantage of having books lies in the fact that the drawings can be kept together, but if loose sheets are used or sketch blocks of cartridge paper, a brown or thick paper envelope should be made to keep the loose sheets in.

The Blackboards should be as many as possible and arranged in the most convenient places, and wherever most convenient a hinged one should be fixed, so as to be in full view of the whole class, with the hinge about the level of the boys' eyes. The blackboard work should partake more of the quick sketching style than elaborate drawings to scale. It is advisable at first to draw with a ruler and set square, but when the drawing is a little advanced a dimensioned sketch is

Digitized by Google

all that is necessary. The instructor should himself practice blackboard drawing, and would find a course of work in it very useful.

Drawing Boards, etc.—These should come into use in the second year, and their advantage will then be felt. It is not advisable to commence with them, otherwise the training given by the use of the ruler and set square would be lost. Half Imperial size is best for all-round work, and is just large enough to give the boys an increased difficulty to overcome. The tee square should be a plain blade, screwed on the stock, and arranged so as to be kept under the board by means of a groove in the battens.

Benchwork.—As the greater part of the lesson should be devoted to benchwork, a considerable amount of forethought will be required to ensure that each boy's time is well occupied. There will be no temptation to idleness if sufficient work is provided. A wise discretion, too, must be exercised in the choice of models, for many cases will occur where the scheme model is unsuitable, and a new one should be designed to take its place; here a note-book is essential to jot down the peculiarities of the various boys and their needs in the shape of work, this should be looked over after the lesson and new work prepared for next time. *It must be remembered that although much teaching may be done collectively the important work is done individually, and the requirements and character of each pupil must be studied if success is coveted.*

Digitized by Google

To lay down an unalterable course of work would be folly, for a large amount depends on the individual capacity of the student. While the scheme of work given in this book will be suitable to a large proportion of children, there are sure to be many for whom it will have to be altered, and it should be remembered as an important fact that *no student should be allowed to pass to the next stage without making a satisfactory piece of work in the stage in hand;* another model based on exactly the same manipulation should be given in case of failure.

It is a common practice to have teaching models of the class model worked out in several stages, it has however little to recommend it, and may profitably be omitted in place of several practical demonstrations on the part of the teacher himself. It will help him in maintaining the respect of the child, and will certainly keep up his own hand skill, in addition to the great help it will give to the student; they see the proper methods of holding tools, and correct order of the various manipulations. It is a good plan for the teacher to start each piece of work with his class, and work it out a little in advance of them, but not on any account to make any difficult model at one demonstration, but take a stage at a time.

Great attention must always be paid to the state of the tools and bench, a little carelessness in attending to this will result in bad habits being formed, most difficult to break. If the students are

Digitized by Google

trained from their first lesson to take care of their tools and keep them in order on their bench, they will form a habit of it. It is not advisable to have more than the tools actually being used on the bench at one time. For instance in planing, first the plane, square and rule, and when required add the gauge, but directly the work is finished these tools should be replaced by those needed in the next stage and so on. There never need be more than three or four tools on the bench at any time.

Sharpening is a problem which confronts all teachers, and a method should be organised for it. It is not advisable to allow first-year boys to do their sharpening, but all second-years and upwards ought certainly to sharpen each tool before use. I allude, of course, to planes, chisels, gouges, etc.; the saws should be set and sharpened by an experienced man. A time-table should be arranged so as to take all grinding in turn, if it is done at the centre.

A definite arrangement must be made for entering and leaving the manual training room, and the distribution and collection of material and work. The boys should be made accustomed to certain precise words of command, and even in this way a liking for order may be trained, for it is even better to lose a little time than have confusion; a properly-constructed time-table would allow for this, and it should be strictly adhered to.

Object Lessons.—These are quite an important part

Digitized by Google

of manual training, but are often spoiled, and just as often totally omitted, but considering the fact that they should never exceed ten minutes, it is a very small call on the attention of the boys; they are best arranged as a little relaxation from the benchwork, and should be made as interesting as possible.

It is a great mistake to occasionally give long lectures on the various timbers and tools. Much more good can be done if the lessons are given regularly, and occupy only a few minutes. Here the advantage of rapid blackboard sketching will be seen, for a few sketches will illustrate a point far quicker than any explanation.

Digitized by Google

CHAPTER VII.

THE INSTRUCTION OF THE PHYSICALLY AND MENTALLY DEFICIENT AND BLIND.

The extension of the benefits of manual training to those children who are afflicted with deafness, blindness or a poor intellect, has only been attempted in a few large towns. This is mainly because the majority of instructors have had no experience, and no knowledge of the best methods of teaching such children.

There is no other subject capable of enlarging their intellect in such a way as manual work. The outlook of these poor children is in many cases very dark, but a good deal may be done for them while at school, for their hands may be so trained as to make them capable of earning a living by manual labour.

The course of work designed for such children should commence very simply with a course of paper and cardboard work, following with strip work, and then simple sawing and grooving.

The deaf, deaf and dumb, and other physically

Digitized by Google

FIG. 1. Letter T. FIG. 2. A Square. FIG. 3. Letter L.
FIG. 4. Letter E. FIG. 5. Letter H. FIG. 6. An Easel.

FIG. 6.

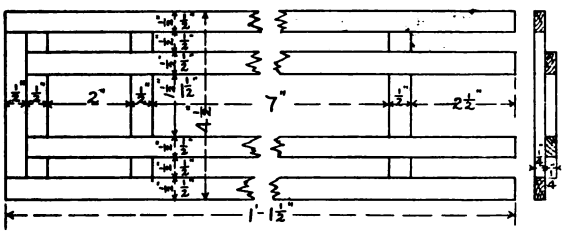

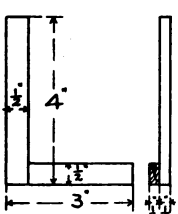

FIG. 3.

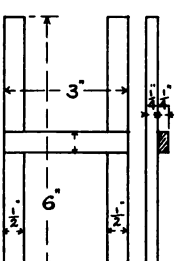

FIG. 5.

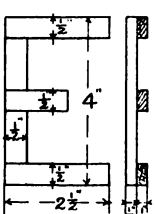

FIG. 4.

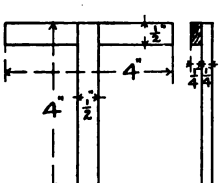

FIG. 1.

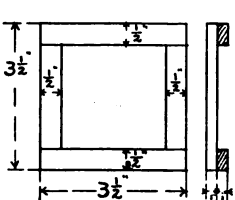

FIG. 2.

COURSE IN STRIP WORK.—I.

Digitized by Google

defective children may be taught together, but a different system must be used for the blind.

The paper and cardboard work should be so designed to give a good idea of shape and size, and the stripwork, with its training in the use of the rule and saw, will prove invaluable in the woodwork course. The latter form of manual work may be taken by the woodwork instructor, but is better if it is carefully given by one of the usual teachers, because of their power to impart to their pupils idea of size and proportion, as well as being better able, owing to their special training and constant intercourse with their children, to teach them the elementary stages of the work.

If properly taught, stripwork, as an introduction to woodwork, has many advantages. The children can commence drawing, and learning the use of the rule, square, saw, bradawl and hammer, and a well-designed course will make them appreciate the value of being able to make a joint. The outlay, too, for such work is only slight, and as it may be done on a bench temporarily placed in the ordinary classroom, it is a very convenient system of training.

A brief outline of the work, the tools needed, and methods of working will be useful.

Each child should be provided with a rule, saw and square. *The rule*, either of wood or steel, should not have more than eighths marked. An illustration is given (Fig. 163, page 127) of a wooden rule, the divisions of which are alternately coloured.

Digitized by Google

FIG. 7. An Oxford Frame. FIG. 8. A Ladder.
FIG. 9. A Rack.

FIG. 9.

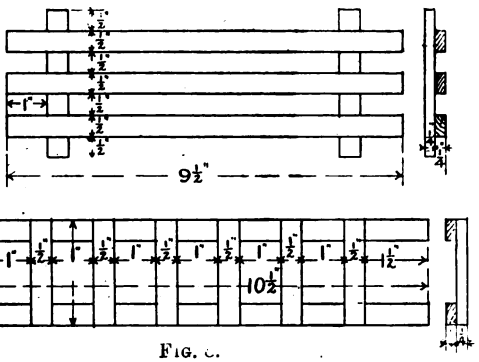

FIG. 8.

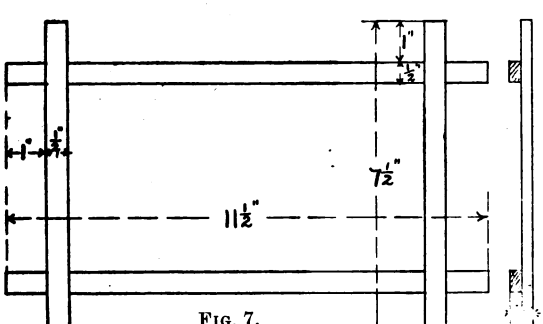

FIG. 7.

Digitized by Google

The saw, not the ordinary tenon, but a small dovetail saw, which will only be needed to cut thin pieces of wood about ¼in. thick.

The square should be of the ordinary pattern, about 4½in. and a few small hammers, bradawls, and brads for general use. Small sawing boards will be needed, and they should be a little smaller than those used in the woodwork course. The bench, owing to the light work done, will undergo no great strain, and could be a board fitted to the class-room table with the pupils ranged around it, and as the numbers should never be above ten, an ordinary sized table would easily accommodate that number. The wood used should be some soft timber, such as pine or satin walnut, preferably the latter, for although it is very much given to warping, it offers just as much resistance to the saw as the children are capable of, and will not easily split if carefully bored before the brads are driven in. A stock of strips about 2ft. long and ¼in. square, ⅜in. wide and ¼in. thick, ½in. wide and ¼in. thick, and some 1in., 2in. and 3in. wide strips of ⅛in. thick should be provided.

The course of work should comprise sawing into various lengths, and making such shapes as squares, oblongs, and then small articles as frames, gates, small racks, easels, ladders and other such plain models, and leading on to more advanced work. The accompanying illustrations (Pages 121 and 123) give a good idea of the course which is progressively designed by Mr. C. Winter.

Digitized by Google

The woodwork course should be a modification of the ordinary one, with a greater variety of the elementary work in sawing, chiselling and planing. A first-year's course should start with planed wood, and only include in the first exercise marking off with the square and sawing, and gradually introducing the gauge, chisel and plane. The second-year's course and upwards will depend on the intelligence of the child, and must be framed accordingly.

A suitable series of exercises for a first-year's course are given, and they should be taken as carefully as possible, impressing on the children the importance of doing each step properly.

1st EXERCISE. (Fig. 154.)

Drawing.—A front side or top and edge view of the wood (Fig. 155), with the lines across. Fig. 163 shows a suitable form of rule.

Woodwork.—Give each pupil a planed piece of wood about 12 inches, and show how to use the square. They should do each step after the instructor, at first mark off the nine lines, and then placing the wood on the sawing board, and the saws in position have one piece sawn off. Now the squareness of the cut should be tested by standing the long piece upright on the newly-sawn end, this will show at once if the cut is not square. Continue until all the pieces have been sawn and placed one by one on the drawing.

Digitized by Google

2nd EXERCISE. (FIG. 156.)

Drawing.—The drawing of this exercise will be a little more difficult, but if the actual exercise is placed before them it will be more quickly understood.

Woodwork.—A 12in. piece of planed wood as before, and with less instruction, but as much careful supervision, let each length be sawn off and placed on the drawing.

3rd EXERCISE. (FIG. 157.)

Drawing.—This drawing should be similar to the previous ones, but show a difference in representing on paper the finished exercise, for in the previous drawing the upright lines were projected straight down to the plan, but in this one it is a little different, and the lines represent the length of the pieces instead of the thickness.

Woodwork.—Planed wood as before, and even less instruction, for the children by now should be able to make a very square cut to any length.

4th EXERCISE. (FIG. 158.)

Drawing.—There is no increased difficulty in this drawing. (Fig. 159.)

Woodwork.—Planed wood as before. In this exercise the gauge and chisel are introduced. Their use should be shown, and each stage carefully demonstrated. Then placing the wood in the vice the cuts should be taken slowly and carefully.

Digitized by Google

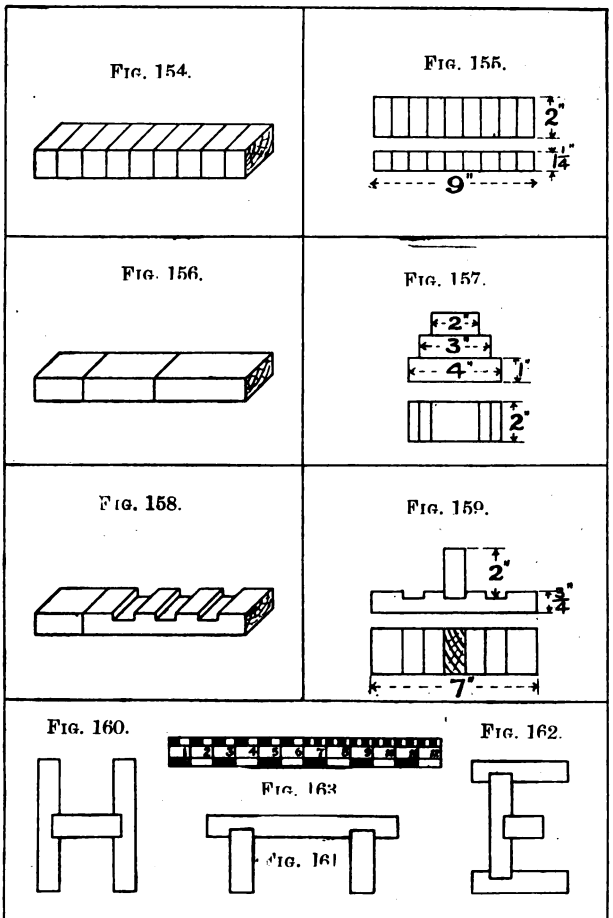

COURSE FOR PHYSICALLY & MENTALLY DEFICIENT.

Digitized by Google

5th EXERCISE. (FIG. 160.)

Drawing.—A little extra work will be experienced in this drawing, but it is not any more difficult.

Woodwork: Planed Wood.—In this exercise there is no new operation, carefully mark out and saw the first groove, then with frequent demonstration cut each groove. It will be found that the children will be getting a very much increased interest in their work, and will probably want to rush through it, but they must be carefully looked after so as to ensure a good exercise.

6th EXERCISE. (FIG. 161)

Drawing.—This should prove easy, and finished with very little assistance.

Woodwork.—Planing may here be attempted, but if the children are feeble or particularly dense, it may be left much later. The other work would be done very quickly.

7th EXERCISE. (FIG. 162.)

Drawing.—Care will have to be taken that the lines are kept upright.

Woodwork.—This is only a little more work than the previous exercise, and all the grooves should be cut before sawing apart. It will be found a very interesting exercise.

These exercises would give enough work for a year, but if any more were needed they might be taken

Digitized by Google

from the ordinary first-year's course, and it will be found that with a careful training such as above, the models of the first year might be taken (with some modifications) as a second-year's course. In any case where the exercise would prove too difficult it will be possible to simplify the work considerably.

The Blind must be treated quite differently, and it is best to start with planing and get them used to a true surface. It will not be found difficult to teach them this operation, for they can test their work by placing it flat on the bench and feeling for unevenness, and for squareness by placing it against the square. In sawing, notched sticks must be made to act as gauges to start the saw-cut, and if a series of notches are cut at certain distances and a deep gauge line made, it will be found possible for blind boys to do grooving as well as planing, and gradually lead on up to joints, for it is astonishing how quickly these boys work when they have once got hold of the principles.

Digitized by Google

CHAPTER VIII.

OBJECT LESSONS.

These lessons form an important part of a manual training scheme, and are often not given at all, or perhaps only occasionally without any method.

Nearly one hundred headings of lessons are given below, spread over a three years' course, and several of them will be found illustrated with sketches suitable for reproducing on the blackboard; only the important items have been touched upon, and further information if required, may be found in the various books on timber, etc.

A collection of the apparatus should be gathered together and arranged in order in a cupboard.

The duration of an object lesson should not be more than ten minutes, and, to afford a rest, is best taken in the middle of the woodwork lesson.

Whenever possible the experiment should be performed by all or at least some of the boys, and every opportunity taken of demonstrating some fact connected with the work in hand, that they have learnt from these lessons.

Digitized by Google

Object Lessons. First Year.

1. *Set Squares.*—Size of angles and divisions of circumference. Experiment to prove that three angles of any triangle equal to two right angles. Cut out a triangle in paper, cut off and pin the three angles on the board; they will, at the base where the angles meet form a straight line.

2. *Yellow deal.*—Wood of Scotch fir or northern pine. Grows in northern Europe. Called yellow deal because of the colour and form in which it is imported. Most commonly used for building, etc.

3. *Fibre and grain.*—Exhibit skein of string and husk of cocoanut, and explain that the structure of timber is not unlike examples. A chisel will part fibres if placed along the grain, but will cut them if placed across.

4. *Tenon Saw.*—Explain parts: Handle of beech, blade of thin steel, and back of iron or brass. *Beech* used for its toughness and strength in short grain. *Blade* indented with teeth, which are sharp and given a set. *Back* to give stiffness to blade and sufficient weight.

5. *Care of Tools.*—Explain delicate edges of cutting tools, need to protect these edges from injury, necessity of keeping only those tools needed on the bench, and to have a certain place for each tool.

6. *Chisel.*—The *handle* of hardwood, such as ash or beech; *ferrule* of brass to prevent handle from splitting, and *blade* of steel with a shoulder to prevent

Digitized by Google

blade being driven into handle. Ground on one side to a bevel, and sharpened on an oilstone.

7. *Gauge.*—Used for marking parallel lines along the grain. It parts the fibres. Composed of four parts, each beginning with an S. *Stock* and *stem* made of beech; *screw* made of boxwood; *spur* made of steel. The stock may be moved along the stem, and fixed at any distance away from spur by the screw.

8. *Jackplane.*—Derives its name from the fact that it does the rough work, a jack of all planes. Composed of wooden body made of beech and steel cutte or blade. The blade or plane-iron is adjusted or set by means of hammer and mallet, and fixed by a wedge.

9. *Basswood.*—Grows in North America. A soft wood of a green colour when freshly cut, but with exposure turning brown. The tree is similar to English lime, but is very much larger, and from the inner surface of its bark comes the bast fibres used by gardeners and others, and for making matting.

10. *Straight Edge.*—Explain how to test for straight edge by sight, and by putting two edges together. Give Euclid's explanation, and show by experiment with two long nails, and some string, that the string is only straight when most tightly stretched, and therefore the shortest distance between the nails.

11. *Polygons*, meaning a figure with many angles, and therefore many sides.—Draw the various figures from triangle to Dodecagon, *i.e.*, square, pentagon, hexagon, heptagon, octagon, nonagon, etc. Prefix giving

Digitized by Google

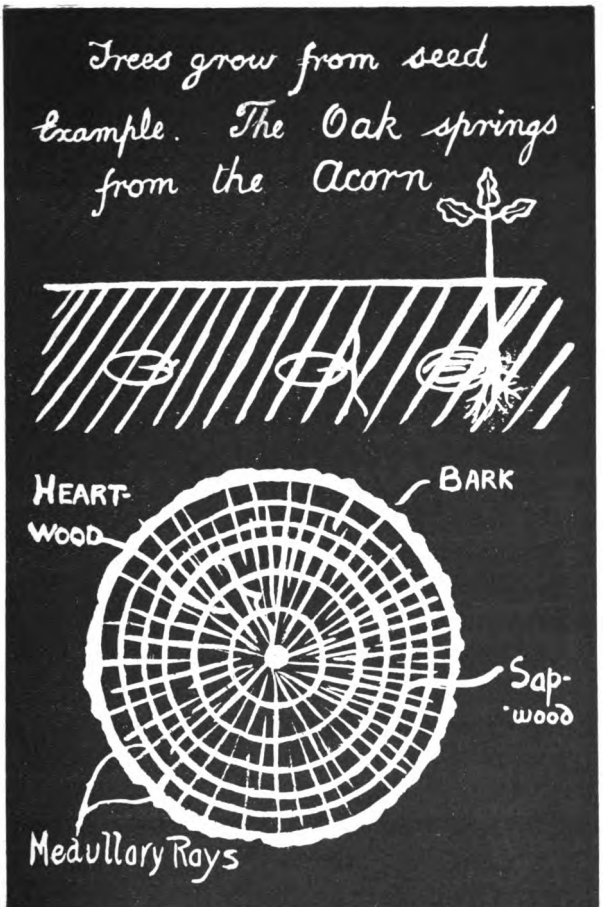

SPECIMEN BLACKBOARD ILLUSTRATION.
(Object Lesson No. 15).

Digitized by Google

Latin number before "gones" meaning an angle (*n.b.*, dia-gonal=across the angles).

12. *Cutting Edge.*—Explain that the finely-sharped edge of a cutting tool is called the cutting edge, and steel is the only metal which will retain a sharp edge. It needs constant sharpening, and when angle is "obtuse" needs grinding to make it "acute."

13. *Pencils and their manufacture.*—A case explaining the mode of making pencils should be procured, and if each step is explained from the examples there will be no need of further explanation here.

14. *Parts of Jackplane.*—Exhibit a section of the plane, which can easily be made from an old plane if it is sawn in half and the iron divided by means of cold chisel. The body, handle, and wedge made of beech-wood, because of its strength, even texture, and closeness of grain; the cutting iron made of iron, steel faced; cap iron made of iron, held together by means of screw.

15. *Growth of Tree from Seed.*—Show by illustration the way the seed sends forth shoots, and how root works downwards while branch works upwards, and gradually the seed decays, its purpose fulfilled, and both root and branch increase in size as nutrition is found.

16. *Use of Cap Iron.*—Show by means of diagrams the way cap iron breaks the shaving. The object is to prevent the cutting iron splitting the fibres by breaking the fibres in the shaving as soon as it is cut.

17. *Screw driver.*—Used for turning screws, and com-

Digitized by Google

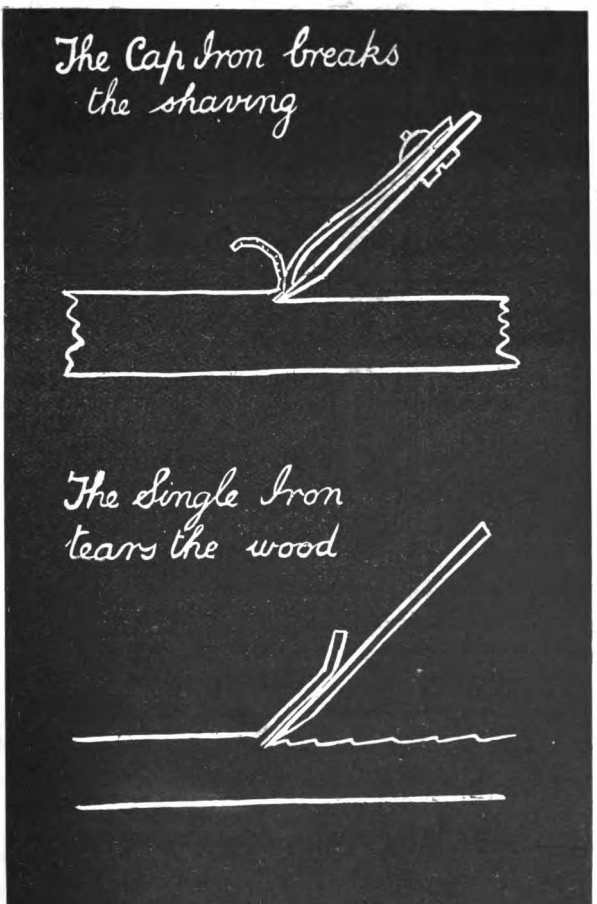

SPECIMEN BLACKBOARD ILLUSTRATION.
(Object Lesson No. 16).

Digitized by Google

posed of three parts: *Handle*, made of beech or other hard wood; the *brass ferrule* to prevent blade being driven in, and giving strength to the handle, and a *blade* which is flattened out near the top, and has a "tang" and shoulders which fit into the ferrule to prevent the blade twisting about. It is a form of *lever*.

18. *A Plane Surface.*—Explain that the surface of still water is practically plane, but differentiate between a plane and a level surface.

19. *The Cutting Iron.*—Show how this is composed of both steel and iron welded together; and the reason for this is, that it is both easier to grind and that it renders the blade cheaper.

20. *Products of Pine Trees.*—Provide a few test tubes, place in them some of the products, and arrange them on a stand. *Liquids*, turpentine, Stockholm tar, and gum. *Solids*, resin, charcoal, and potash. Explain how turpentine is distilled from resin, and its various uses, as well as those of the other products.

21. *Battens, Deals, etc.*—Explain how the timber is cut up and shipped in various forms. *A Plank*, from 8ft. upwards, 11in. broad, and up to 6in. thick. *A Deal*, from 8ft. upwards, 9in. broad, and up to 4in. thick. *A Batten*, from 8ft. upwards, 3in. or 4in. broad, and up to 1in. or 2in. thick. *Balks*, squared up timber of large size. *Logs*, roughly hewn pieces of timber, usually round.

22. *Try-square.*—Used for trying the squareness of

Digitized by Google

the work. Composed of three parts :—*A stock* made of rosewood and ebony, brass plate or fence on the edge to prevent wear. *A blade* made of steel with trued edges fixed into the stock at an angle of 90 deg., or a right angle.

23. *Conifers.*—Explain that this is the name given to that branch of trees which bear *cones* and have a narrow needle-pointed leaf. Exhibit some cones and leaves of one or two kinds of conifers.

24. *Hand-saw.*—Show that the hand-saw is used principally for sawing down the grain to any depth. Compare parts with tenon saw, and show difference in handle and blade, and explain in many cases top of blade is thinner than that near the teeth.

25. *Nails.*—Provide a number of different nails, cut wrought, wire, brads, and tacks, and explain the various uses and manufacture. *Cut nails*, stamped out of sheet iron or steel. *Wrought nails*, hammered from iron. *Wire nails*, made from iron or steel wire. Experiment with specimens, and show their effect in the wood, and explain how the fibres hold the nail.

26. *Pines and Firs* are different kinds of conifer. Illustrate the difference between a pine tree and fir, and show the shapes of leaves. Show that the Scotch fir is wrongly named, it is really a pine.

27. *Hammer.*—Show the two parts, the *handle* of ash, because of its flexibility, and explain the effect if a flexible material were not used. The *head* of steel. Show the way the "eye" of the head is made,

Digitized by Google

and the use of the wedge driven into the end of handle. The upper part of the head is called the pane, there are *cross* (the usual pattern), *straight*, and *ball-paned* hammers.

28. *Sapwood and Heartwood.*—Provide specimens containing examples, and show difference in colour, and explain why sapwood, not being fully formed, should not be used, and that the heartwood is the only durable portion of timber. Explain that the sapwood in its turn becomes heartwood.

29. *Mallet.*—Explain the need of mallet, and difference in blow given by it to that of a hammer, the latter rebounding, while the depth and size of the head of a mallet offers a resistance, and renders the blow dead. Take the handle out and show the direction of taper in the mortise and handle, and which causes the head to tighten with centrifugal force.

30. *Broad Leaf Trees.*—Exhibit some leaves of broad leaf trees, and explain that the great difference between them and conifers has resulted in the name. Show, however, that they both belong to one division of trees, but form a sub-division with conifers.

31. *Bradawl,* composed of three parts, very similar to the chisel. A handle, ferrule, and blade with shoulder and "tang." Explain the edge is sharpened on both sides, and should cut across the grain. Give practical illustration.

32. *Annual Rings.*—Provide a specimen of larch in which the rings are well marked, and explain the

Digitized by Google

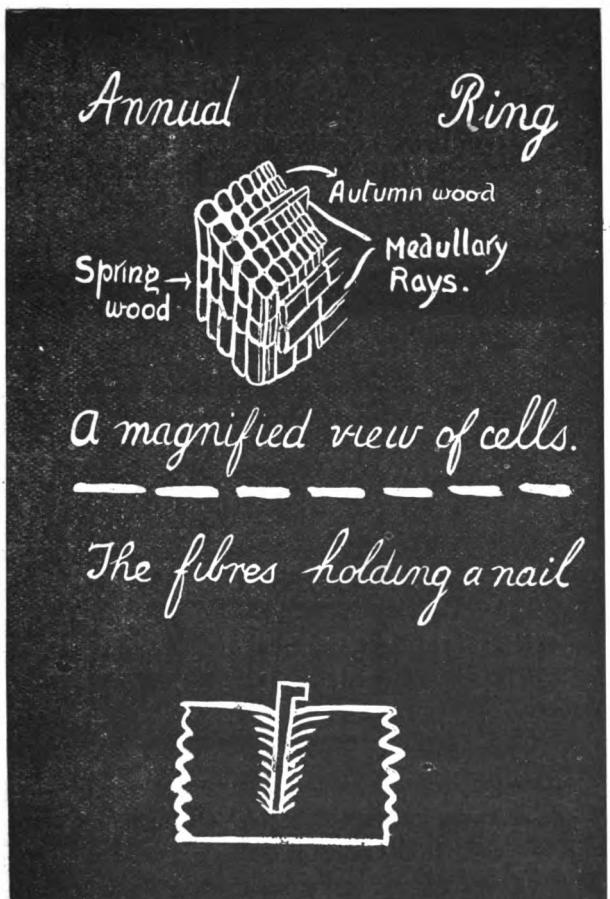

SPECIMEN BLACKBOARD ILLUSTRATION.
(Object Lessons Nos. 25 and 32.)

Digitized by Google

growth of the tree year by year produces a new ring commenced by the loosely-built springwood, and surrounded by the harder, and more closely-formed autumn wood.

33. *Pincers.*—Composed of two parts, which are practically alike and made of steel, rivetted together, and capable of bearing a big strain. They form an excellent example of the lever.

Object Lessons. Second Year.

1. *Tee-square.*—Explain its construction and need of great care in use to prevent it getting out of truth.

2. *Walnut* grows in England, Europe, and the United States of America. The English variety is a light brown colour, but the American is of a purple black. Walnut has a beautiful grain, and is a hard wood with fine close fibres, and even in texture. It is noted for the fact that it does not shrink or warp after seasoning, and for this reason, coupled with the absence of any corrosive action on metal, is used exclusively for gun stocks. It is principally used for furniture and ornamental work.

3. *Spokeshaves* are made both of wood and metal: *Wooden spokeshaves*, made either from beech or box-wood, and fitted with a steel blade which has a tang at both ends to fit into the stock; *Iron spokeshaves*, the stock is made for cast iron, and the blade is similar to the cutting-iron of a plane screwed on to the stock, which is sometimes fitted with a screw adjustment.

Digitized by Google

They are similar in action to a plane, and used for planing curved surfaces, and are very useful. Show differences between each kind and ways of adjusting the iron.

4. *Satin Walnut.*—Grows in America. Is a new wood, light brown in colour, fairly strong and even in texture, but very liable to warp. Used for furniture, etc.

5. *Bow Saw.*—Is composed of four parts. The *frame*, made of beech. The *blade*, made of steel. *Handles*, made of boxwood with brass ends. *String*, made of whip cord. This saw illustrates the laws of compression and tension, which should be pointed out. It is used for sawing curves. The blade is nearly triangular in section, and the thinness at the top of blade and the wide set of teeth allows the saw to be turned in a small space. Point out the necessity of tightening up the string when the saw is in use, and loosening when finished with.

6. *Use of Bark.*—Explain that the barks of various trees are of some use. That of the oak for use in tanning, the cork tree provides cork from its bark, and other trees in various countries have bark useful in medicinal ways. Show that its primary use is to protect by a flexible covering the growing portion of the tree.

7. *Mortise Gauge.*—Compare with ordinary marking gauge, and show that this one is made of rosewood or ebony, has a steel screw, and a second and adjustable

Digitized by Google

spur. It is used for running a double parallel line along the grain.

8. *Felling.*—Explain that the woodman will choose winter for cutting down a tree, because there is least sap or moisture in it, and that there are several ways of felling. The old way, using the axe, then sawing with a long saw, and now experiments have been made with an electrically-heated wire. Explain the life of the lumbermen of America, where huge quantities of timber are felled and sent down the great rivers in the form of immense rafts.

9. *Mortise Chisel.*—Composed of two parts, and made in two kinds. One similar to a firmer chisel, but much stronger, and having the thickest part near the shoulder, which is much stronger, too, than in the firmer chisel. Compare the two, firmer and mortise, and point out the difference. The other kind is called a socket chisel, owing to the handle fitting in a socket. This chisel is mostly composed of iron with a steel face welded on, similar to the cutting-iron of the plane.

10. *Natural Seasoning.*—This is the name given to preparation of the newly-felled wood to make it fit for commercial purposes. The wood is usually cut into boards and stacked, so as to get plenty of ventilation, and in this way drying the sap which still remains in it. The effect of this drying is to shrink the wood, and often results in the wood splitting, but this is in a great way avoided when the timber is cut up in a proper manner.

Digitized by Google

11. *Trying and Smoothing Planes.*—The trying plane is much longer and heavier than the jackplane, and as its iron is set finer and it has a larger face a much truer surface can be made. The smoothing plane is much smaller than the jackplane, and has no handle, and is used for smoothing only, its short length renders it practically useless to get a large true surface, this is got by the larger plane, and the smoothing plane used finally to clean up. The Swedish pattern has a handle, but it is not generally used in England.

12. *Other ways of Seasoning.*—In these days of high rents a timber merchant cannot afford the expensive natural seasoning and wants in a few days what would take months in the natural way. So other methods have been found. One a little shorter than the natural way is to place the logs in a running stream, and gradually the sap is washed out, and afterwards the timber may be dried quickly, but the most common way is the hot-air system, in which the timber is placed in a large chamber heated by hot air, which soon dries up the wood; it is however more likely to split, but it is very much quicker and cheaper.

13. *Oilstone.*—Oilstones are of various kinds, the chief being Turkey, Washita, and Arkansas. Artificial stones made of emery. Explain the action the stone has on the steel, the pores having a cutting action similar to a file, and that only a lubricating oil must be used, such as sweet or olive oils. Explain that the oil keeps the pores open, and

Digitized by Google

that the stone should be kept covered and free from dust.

14. *Stacking Timber.*—Provide some model stacks of timber, and explain how, unless the timber is properly stacked with space between each board, it will not dry evenly, and probably get diseased.

15. *Grindstone.*—Point out the use of this stone, its coarse grit cutting away in a quicker manner than an oilstone, the large angle necessary for a cutting edge. The grit stone usually used comes from the Bilston quarries. Explain that to keep the grain open, water must be used, and also serves to keep the iron cool.

16. *Cutting-up Timber.*—Show by means of black-board sketches or diagrams how a log should be cut-up to the greatest advantage. This is done either by circular or band saw.

17. *Screws.*—Provide specimens of various kinds of screws, and an old screw without the gimlet point, and explain the difference and great superiority of the modern screw, and the fact that the screw is a kind of wedge. Prove this by an experiment—cut from paper a long wedge, wrap this round a cylinder and the thread of the screw will be seen.

18. *Principal Broad-leaf Trees.*—Oak, beech, ash, elm, sycamore, walnut, which all grow in England. Mahogany, walnut, basswood, which grow in America Point out their characteristics.

19. *Scribing Gouge* is similar in construction to a chisel, but has curved blade, which is sharpened on the

Digitized by Google

SPECIMEN BLACKBOARD ILLUSTRATION.
(Second Year Object Lessons Nos. 10 and 15.)

Digitized by Google

inner or concave side by means of a small piece of oilstone called a "slip."

20. *Cambium* is the name given to the outside ring of cells which form the active and growing portion of a tree, and have the power of increasing their number, forming during the year one of the rings of cells called annual rings. The exact way of their growth is unknown, but in some way they convert the sap into wood.

21. *Firmer Gouges* are indentical in shape to scribing gouges, differing only in the way they are ground, which is on the outside or convex side.

22. *Stem and Leaves.*—If a cross section of the stem or trunk of a tree be examined, it will be seen that it is composed of several parts. The bark, the sapwood, with the invisible cambium between, heartwood and pith. These parts all have their various uses: the pith exercises its functions in the early life of the tree before the cambium has begun to act; the leaves breath the air and extract from it carbonic acid gas, and returning oxygen; the carbonic acid gas is converted into starch, and helps to fill up the cells. They also exhale moisture.

23. *Wing Compasses* are made from iron, and composed of three parts, two legs movable and rivetted at the top, and sharpened to a point, and with a wing attached to one, which passes through a slot in the other, in which is fixed a screw to fix the legs at the required position.

Digitized by Google

24. *Principal Conifers.*—Northern pine, spruce fir, and larch, which grow in northern Europe. Weymouth pine, and Oregon pine, which grow in Canada and North America. Pitch pine and cedar, grow in southern part of North America. Cedar also grows in Asia Minor, India, and Australia.

25. *Glue.*—A gelatinous substance; is composed of the waste pieces of skin, hoofs and horns, and other offal. These substances are boiled, melted, re-boiled, and finally made into square cakes. There are three kinds: Scotch, strongest, a dark reddish brown colour. French, strong, transparent, thin, and an amber colour. Town, inferior in every way.

26. *Weymouth Pine*, comes from Canada, and is of straw colour when freshly cut, but tones down darker with exposure. The tree grows an immense size, logs as long as seventy feet have been imported. It has a very even texture, and is very soft, and about the best wood for manual instruction purposes is commonly called *Yellow Pine.*

27. *How to prepare and use Glue.*—The glue should be broken up and soaked in water for at least twelve hours, and then boiled steadily for about an hour. To use it, have it as hot as possible, and spread it lightly and quickly over the surfaces to be joined, then they should be rubbed together to exclude all superfluous glue, and kept under pressure till dry. Points to remember: The best glue is equal mixture of Scotch and French. Glue loses some of its strength every

Digitized by Google

time it is heated. The glue-pot should be kept clean, as dirty glue is useless. It should be thin, clean and hot.

28. *Cramp and Holdfast.*—The action of these two tools are similar, that of applying pressure by means of a screw. They should be carefully used, as too much pressure will often spoil the work, for they are capable of exerting great force.

29. *Teak* grows in India and Burmah, and is of a dark brown colour. It contains an oil which gives it the power of repelling the attack of the white ants of India. The tree is of immense size, and bears very large leaves. It is used in shipbuilding, shop and laboratory fittings, etc.

30. *Gimlets.*—Composed of two parts, a steel shank and wooden handle. There are two kinds, one with a groove along the shank called shell gimlets, and the other with a twist running up the shank, these are called twist gimlets, and are the better kind. The action of the groove and hollow twist is the same, to allow the core to escape. A large kind of gimlet is called an auger.

31. *Medullary Rays.*—This is the name given to the rows of cells which run from the middle to the outside of the wood. Their use is to bind the rings together, and so give strength to the timber. They are often short in length, sometimes only joining one or two rings, but they are always at right angles to the annual rings.

Digitized by Google

32. *Saws.*—Illustrate on the board the kinds of teeth in a tenon saw, hand saw and rip saw. Showing the different positions of the 60 deg. angle, and show also the meaning of the words "pitch," "sit," and "gullet."

33. *Sycamore* grows in England and Europe, is fairly hard and white in colour, but is liable to warp. It is used for cabinet-making and marquetry.

Object Lessons. Third Year.

1. *Brace and Bits.—The brace* is composed of a steel crank, with a head and handle made of lignum vitæ, and fitted with adjustable jaws. *The bits*, made of steel, hardened and tempered, are of various kinds, the most common is the centre bit, used generally to bore holes from $\frac{1}{4}$in. to $1\frac{1}{2}$in. The shell, spoon, or pin bit, hollowed like a gouge, are used in boring through thick pieces of wood. The auger or twist bit, bores a true hole, easiest and quickest. The wood and metal countersink bit, enlarges the top to a conical shape for screw head, etc. The turnscrew bit, used for driving screws quickly. The rimer bit, enlarges existing holes.

2. *Beech.*—Grows both in England, Europe, Asia, America, and Australia, and is of a light brown colour. It has a straight grain, a very distinct medullary ray, and is of a very even texture. The timber is largely used by tool makers, and also in making chairs and cabinet work.

Digitized by Google

3. *Steel* is really iron improved in quality by the addition of carbon. This addition makes it stronger, and finer in grain. Steel has the important quality of being tempered on heating and then plunged into water. It may be considered the universal metal, used for needles and steel girders, screws and ships of war. Show the effect caused by heating steel to a red heat, and cooling first in water, and then slowly. A broken bow-saw blade will be found very useful for this experiment.

4. *Oak.*—There are two kinds, ordinary and wainscot; the latter comes from Holland and Riga, but oak grows in England, nearly all over Europe, and North America. Owing to its rich brown colour and the [redacted] grain, that beautiful effect gained by cutting [redacted] across the medullary rays, the timber is high[redacted]alued. It is a very strong and heavy wood, but o[redacted]n uneven texture, and it contains a corrosive acid, [redacted]ich affects metal fastenings. The tree bears gall nuts, which are formed by the gall fly. The bark containing gallic acid is used for tanning. The timber is universally used.

5. *Sharpening Gouges.*—These tools are difficult to sharpen, the scribing gouges must be sharpened by means of an oilstone slip. While firmer gouges must be placed on the stone and held at the cutting angle, and rolled from side to side while moving up and down the stone.

6. *Ash*, grows in England, Asia, and America. It

Digitized by Google

is of a whitish brown colour, and is usually uneven in grain. It is noted for its flexibility and strength, and used by coachbuilders, and for building tramcars and railway carriages, in fact any position where strength combined with flexibility is required.

7. *Sharpening Saws.*—This is an operation that requires a lot of practice and skill. The saw is first set, in the case of the saws of the manual training room, by means of a thin hammer which knocks down the teeth to a certain distance. Then a triangular file is used to give each tooth a sharp point and edge.

8. *Mahogany.*—There are two kinds, Spanish and Honduras. *The Spanish variety*, which is the better kind, and contains chalk-like marks, grows in the W[illegible] Indian Islands, and originally came from Cu[illegible] brought to Europe by the Spaniards, and name[illegible]r them. The Honduras variety grows in Central A[illegible]rica, and is not so strong or durable. Both timbe[illegible]have an even texture and a rich red colour, and on this account are used principally for ornamental work.

9. *Rebate Planes* are made in several ways, usually a thin piece of beech with the inclined iron placed in at right angles to the side or on the "skew." They are used where the whole width of the cutting edge is required, such as a rebate, etc.

10. *Boxwood* grows in England, inferior varieties come from Asia. An even-grained wood of a yellow colour, possessing immense strength and great weight.

Digitized by Google

It is used by tool-makers, instrument makers, and for turning.

11. *The Bench.*—Sketches should be made of the various joints used in the construction of the bench. The timber named, and the use and construction of the vice and stop, etc., explained.

12. *White Deal* grows in Northern Europe, and has a white silvery appearance when planed. It is fairly strong, but has plenty of knots. It comes from the spruce fir, and the timber is used in building, and for purposes where a wood of a clean white appearance is needed.

13. *Roots and their Use.*—Roots play an active part in the life of the tree. They form a foundation to the trunk, and keep the tree firmly attached to the ground, and more important still, they absorb from the soil moisture and various substances necessary to the growth of the tree.

14. *Larch* grows in England, in Northern Europe and Switzerland. It is of a brown colour and even texture. It is a strong timber, and used where a durable wood is required. The tree is one of the most graceful of the conifers.

15. *Bevels* are akin to the square, and are of two kinds, fixed and movable. The movable bevel is composed of three parts, *a wooden stock*, either ebony or rosewood, bound at each end with brass, *a steel blade*, having a long slot in it, and *a screw* fitting in the end of the stock, and through the slot in the blade.

Digitized by Google

SPECIMEN BLACKBOARD ILLUSTRATION.
(Third Year Object Lesson No 12.)

Digitized by Google

The mitre bevel (45 deg.) is the commonest fixed bevel.

16. *Pitch Pine* grows in the southern portion of the United States. It is of a rich brown colour, with red markings. The texture is very uneven, but its grain has a good appearance when "finished." It is noted for the amount of resin it contains. It is used where great strength is required, and for ornamental cabinet work, church and school furniture.

17. *Elm* grows in England, Europe, and some parts of America, and is of a reddish-brown colour. Its texture is fairly even, but the grain is very twisted. It is tough and fairly flexible, the sapwood is as durable as the heartwood, and is noted for its durability under water. Used by wheelwrights, coach, and boat-builders.

18. *Exogen* is the botanical name given to that great group of trees, in which is included conifers and broad-leaf trees. The word is derived from Greek, and means an outside grower. These trees increase their bulk by continually forming new layers of wood outside the old layers.

19. *Cedar* grows in Asia Minor, the southern portion of North America, India, and Australia. It is very even in texture and soft, is durable, but not very strong. It has a reddish brown colour, and its sapwood is white. The timber has a pleasant odour, and is used in cabinet-making, and for covering the lead of pencils.

20. *Endogen*, or an inward grower is the botanical

Digitized by Google

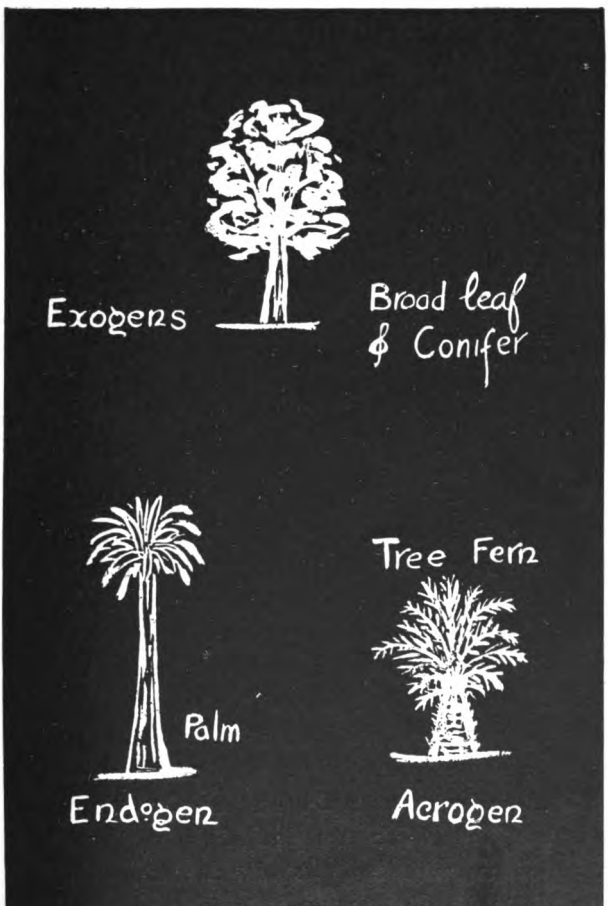

SPECIMEN BLACKBOARD ILLUSTRATION.
(Third Year Object Lessons Nos. 18, 20, and 22.)

Digitized by Google

name given to that class of tree, such as palms, which grow inwardly. They are not suitable for timber.

21. *Kauri Pine* grows in New Zealand, and is of a silky light brown colour when planed. It is even in texture, and has a straight grain. The tree grows to an immense height, and there exudes from the tree a gum which is of great value, and used in making high-class varnishes. It is used for all purposes where a straight-grained strong and flexible wood is required.

22. *Acrogen* is another botanical name, meaning a summit growth represented by the tree palms; these trees send out their branches from the summit. They are not fit for timber.

23. *Birch.*—The tree grows in England and Europe, and is lightish-brown in colour; it is even in texture, and fairly easy to work, but its grain is rather uneven. The timber is used in cabinet-making, and the tree, with its fine leaves, has a very graceful appearance.

24. *Greenheart* grows in parts of South America. It is light brown in colour, with the sapwood green. It is even in texture, and is one of the strongest timbers known, and used principally in shipbuilding.

25. *The Yew* grows in England and Central Europe, and Asia, and North America. It is of a reddish brown colour, with light and dark veinings, the sapwood is white, the texture is even, and the grain straight. It was grown in churchyards, owing to its great use in the days of bows. It is a very strong

Digitized by Google

and heavy timber, and noted for its durability under water.

26. *Cypress* grows in Asia, but may be seen growing in some parts of England. It is of a yellow colour, even in texture, and has a resinous smell. It is strong and durable, but used principally in the form of veneer, owing to its scarcity.

27. *The Evolution of Tools.*—Explain the gradual introduction of metal in the manufacture of tools, how the pre-historic man used sharp flints for his cutting instruments, how in later ages bronze was discovered and worked, and then iron, and now steel.

28. *Lignum Vitæ* grows in West Indies and Central America, of a dark green colour, with white sapwood. It has an even texture and twisted grain, which is very difficult to split. It is never imported in very large pieces, and is used where great strength is required cogs of wheels, and the packing of propellor shafts are made from it.

29. *Ebony* grows in India and North Africa, is black in colour, with occasionally light streaks in it. It is very hard and strong, and heavy, and is only used in small pieces.

30. *Defects and Diseases of Timber.*—Timber is liable to a good many defects and several diseases. Show illustration of heart, star and cup stakes, and explain the action of dry and wet rot in destroying the fibres and rendering the wood useless, and how necessary it is for timber to be exposed to the air.

Digitized by Google

31. *Forestry* is the art of cultivating forests, and in these days when timber is of considerable value, every large estate keep a staff of foresters whose duty it is to time the felling of trees which have arrived at maturity, and lay out and tend new plantations.

32. *Hornbeam* grows in England and Europe, the timber is similar to ash, but not as strong. It is used for agricultural implement making.

33. *Tulipwood* grows in Central America and Australia, is of a yellowish colour, and has an even texture. It is used for turning and ornamental joinery.

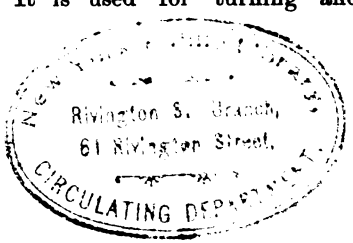

Digitized by Google

TOOLS FOR A CLASS OF TWENTY PUPILS.

For each boy:—

Jack Plane. Tenon Saw.
4 Chisels, 1, $\frac{3}{4}$, $\frac{1}{2}$, $\frac{1}{4}$.
Mallet. Hammer.
Iron Rule, 2 ft. Try Square.
Marking Gauge.
Scribing Knife.

One between two:—

Smoothing Plane. Screwdriver.
Handsaw. Bevel.
Bow Saw, 10 in. Wing Compasses.
Inside and Outside Spokeshave.
Mortise Gauge.

General:—

20 Assorted Bradawls.
4 Oilstones.
2 Slips.
6 Braces.
6 Sets of Assorted Bits (11, from $\frac{1}{4}$ to $1\frac{1}{2}$).
6 Wood Countersink Bits.
12 Spoon Bits.
12 Assorted Files.
3 Trying Planes.
12 Small Screw Cramps.
6 Punches.
2 Oilcans.
6 Pincers.
12 Assorted Scribing and Firmer Gouges.
2 Rebate Planes.
Gluepot.
Grindstone.

Digitized by Google

"THE WOODWORKER"

. COPYRIGHT DESIGNS .

FOR

Carving, Fretwork & Inlay.

We have prepared an ILLUSTRATED LIST OF THE DESIGNS which are ready, and of which particulars have been given in the Journal. We shall be pleased to forward the List on receipt of stamp for postage.

Special Terms to Tool Dealers and Teachers of Carving Classes, if business card is enclosed.

"THE WOODWORKER,"

Design Department,

26-29, Poppin's Court, Fleet Street, E.C.

Digitized by Google

25ct. BOOKS.

ELECTRICITY. The study of, and its laws for beginners, comprising the laws of electric current generation and flow, Ohms law, galvanism, magnetism, induction, principles of dynamos and motors, wiring, with explanations of simple mathematics as applied to electrical calculation. By N. H. SCHNEIDER. With 55 original illustrations and 6 tables.

DRY BATTERIES. A practical handbook on the designing, filling and finishing of dry batteries, with tables, for automobile, gas engine, medical and coil work, electric bells, alarms, telephones, experiments and all purposes requiring a first rate battery. Fully illustrated with 30 original drawings.

ELECTRICAL CIRCUITS AND DIAGRAMS. Being a selection of original up-to-date and practical diagrams for installing annunciators, alarms, bells, electric gas lighting, telephones, electric power light and wiring circuits, induction coils, gas engine igniters, dynamos and motors, armature windings. By N. H. SCHNEIDER.

ELECTRIC BELLS AND ALARMS, How to install them. By N. H. SCHNEIDER. Including batteries, wire and wiring, circuits, pushes, bells, burglar alarms, high and low water alarms, fire alarms, thermostats, annunciators, and the locating and remedying of faults. With 56 original diagrams.

SIMPLE ELECTRICAL WORKING MODELS. How to make them and how to use them. With 43 illustrations.

TELEPHONES AND MICROPHONES. Making and using simple forms of telephones and microphones, with 29 illustrations.

SMALL ELECTRIC MOTORS. How to make and use them. including design, examples of small motors and their applications, speed controllers, starters, fuses, etc. 48 illustrations.

ELECTRIC LIGHTING for amateurs. The installation of electric light on a small scale, construction of lamps and lamp holders, switches batteries and their connections. With 45 illustrations.

X-RAYS SIMPLY EXPLAINED. The theory and practical application of Radiography 10 illustrations and 6 plates.

MODERN PRIMARY BATTERIES. Their construction, use and maintenance. Latest American practice on batteries for telephones, telegraphs, motors, electric lights, coils, &c., &c., arranged as follows: Introduction—Cells for intermittent use. Acid cells. Copper sulphate cells. Miscellaneous cells. Care and selection of batteries. Practical notes and formulas for battery solutions. By N. H. SCHNEIDER. 106 pages, 55 illustrations.

SMALL DYNAMOS AND MOTORS. How to make, test and repair them. By F. E. POWELL. Fourth edition. Arranged under the following headings: General considerations. Field magnets. Armatures. Commutators. Tables of windings for small dynamos and motors. How to build a machine. Useful data, hints, testing, repairs, &c. 76 pages, 57 illustrations.

Digitized by Google

25 CT. BOOKS.

SMALL ELECTRICAL MEASURING INSTRUMENTS describing the making and using of the different instruments fully illustrated. 12mo., paper, 25 cts.

STATIC ELECTRICITY. Simple experiments in. A series of instructive and entertaining electrical experiments with simple and inexpensive apparatus. With 51 illustrations.

SIMPLE SCIENTIFIC EXPERIMENTS. How to perform entertaining and instructive experiments with simple home-made apparatus. With 50 illustrations.

MODEL BOILER MAKING. Contains full instructions for designing and making Model Stationary, Marine and Locomotive Boilers. Fully illustrated with original working drawings.

METAL WORKING TOOLS AND THEIR USES. A Handbook for Young Engineers and Apprentices. Shows how to use simple Tools required in Metal Working and Model Making. Illustrated.

SIMPLE MECHANICAL WORKING MODELS. How to make and use them, including Stationary Engine, Locomotive, Steamboat, Waterwheel, etc. With 34 illustrations.

MODEL STEAMER BUILDING. A practical handbook on the design and construction of Model Steamer Hulls, and fittings, with 39 scale drawings.

MACHINERY FOR MODEL STEAMERS. On the design, construction, fitting and erecting of engines and boilers for model steamers, with 44 scale drawings.

THE LOCOMOTIVE, simply explained. A first introduction to the study of the Locomotive Engine, their design, construction and erection, with a short catechism, and 26 illustrations.

MECHANICAL DRAWING simply explained. Use of instruments, reading and setting out drawings, inking in and finishing, drawings for reproduction, lettering, with 44 illustrations.

BEGINNER'S GUIDE TO THE LATHE. Showing how to work, kind of tools, use of tools, etc. Fully explained and illustrated.

ACETYLENE GAS. How to make and use it. A practical handbook on the uses of Acetylene Gas, suitable apparatus for its generation, hints on fitting up, etc., 34 illustrations.

WOODWORK JOINTS. How to make and where to use them. Mortise and tenon joints, lap joints, dovetail joints, glue joints, scarfing joints, circular work, with 137 illustrations.

STEAM TURBINES. How to design and build them, by H. H. Harrison general considerations; pressure on surface from jets theory of multiple stage turbines, The designing and building of a de Laval Steam Turbine with tables, data, and complete set of drawings to scale, fully explained step by step.

UNIVERSAL TIME CARD MODEL. By setting to the desired hour at any one place the movable model will show AT A GLANCE the actual time of all the other places in the world. Printed in 2 colors. Price 25 cents.

Digitized by Google

A NEW BOOK.—Latest American Practice.

ELECTRIC GAS LIGHTING

——HOW TO INSTALL——

ELECTRIC GAS IGNITING APPARATUS

INCLUDING THE

JUMP SPARK AND MULTIPLE SYSTEMS

FOR USE IN

Houses, Churches, Theatres, Halls, Schools, Stores, or any large building.

Also the care and selection of suitable Batteries, Wiring and Repairs

By H. S. NORRIE.

(*Author of Induction Coils and Coil Making.*)

Contents of Chapters:

1. Introduction. Means of producing Sparks, Induction. Induction Coils. 2. Application of Induction Coils to Gas Lighting. Forms of burners used, pendant, rachet, stem, Welsbach, Automatic, Burners for Gasolene and Acetylene. 3. How to connect up apparatus. Wiring a house. Locating breaks or short circuits. Wiring in finished houses. General remarks. 4. Primary coils and safety devices. 5. How to wire and fit up different systems for lighting of large buildings. 6. The selection of suitable batteries for gas lighting, repairs, maintenance, etc.

VIII + 100 pages, 57 illustrations and diagrams and drawings. Cloth, 50c.

Digitized by Google

EVERYBODY'S BOOK ON ELECTRICITY.

PRACTICAL ELECTRICS.

A UNIVERSAL HANDY-BOOK

ON

EVERYDAY ELECTRICAL MATTERS.

FIFTH EDITION.

CONTENTS.

Alarms.—Doors and Windows; Cisterns; Low Water in Boilers; Time Signals; Clocks. *Batteries.*—Making; Cells; Bichromate; Bunsen; Callan's; Copper-oxide; Cruikshank's; Daniel's; Granule carbon; Groves; Insulite; Leclanché; Lime Chromate; Silver Chloride; Smee; Thermo-electric. *Bells*—Annunciator System; Double System; and Telephone; Making; Magnet for; Bobbins or Coils; Trembling; Single Stroke; Continuous Ringing. *Connections. Carbons. Coils.*—Induction; Primary; Secondary; Contact-breakers; Resistance. *Intensity* Coils.—Reel; Primary; Secondary; Core; Contact-breaker; Condenser; Pedestal; Commutator; Connections. *Dynamo-Electric Machines.*—Relation of Speed to Power; Field-Magnets; Pole-pieces; Field-magnet Coils; Armature Cores and Coils; Commutator Collectors and Brushes; Relation of size to efficiency; Methods of exciting Field-Magnets; Magneto-Dynamos; Separately excited Dynamos; Shunt Dynamos; Organs of Dynamos as constructed in practice; Field-Magnets; Armatures; Collectors; Brush Dynamo; Second Class; Alternate Currents; Third Class. *Fire Risks.*—The Dynamo; Wires; Lamps; Danger to persons. *Measuring.*—Non-Registering Instruments; Registering Instruments. *Microphones.*—Construction, &c. *Motors.*—Application; for Railways. *Phonographs Photophones. Storage.*—Plates. *Terminals.*—Charging. *Telephones.*—Forms; Circuits and Calls; Transmitter and Switch; Switch for Simplex.

135 PAGES. 126 ILLUSTRATIONS. 8 VO.

Cloth, 75 Cents.

Digitized by Google

ELECTRICAL BOOKS.

THE DISEASES OF ELECTRICAL MACHINERY. By ERNST SCHULZ. Edited with a preface by Sylvanus P. Thompson. Contents of Chapters: 1, *Continuous Current Machines*; breakdowns in the armature; brushes and brush holders; faults in the field winding; faults in the regulator or starter. 2, *Singlephase and Polyphase Generators*; faults in armature; grounds in generators; connections of different phases; field windings. 3, *Singlephase and Polyphase Induction Motors*; stator faults; rotor faults. 4, *Transformers*; faults in winding; effects of lightning. 5, *Efficiency*; examples of efficiency calculations.
94 pages, 42 illustrations, 12mo., cloth, $1.00.

ELECTRICAL TABLES AND MEMORANDA. A valuable little reference book for engineers, electricians, motor inspectors and others interested in the electrical science, containing many tables and much valuable information in a very small space, with a number of illustrations, by PROF. SILVANUS THOMPSON. **64mo., roan, gilt edges, 40c.**

THE VOLTAIC ACCUMULATOR. By EMILE REYNIER. Contents: Part 1, Principles, definitions, voltmeters. Part 2, Voltaic accumulators of various types. Part 3, Technology. Part 4, Application of accumulators. **202 pages, 62 illustrations, cloth, $3.00.**

THE MERCURIAL AIR PUMP. By PROF. SILVANUS P. THOMSON, D. Sc. **37 pages, 43 illustrations, large 8vo., paper, 60c.‡**

THERMO-ELECTRIC REACTIONS AND CURRENTS, BETWEEN METALS IN FUSED SALTS. By THOMAS ANDREWS, F.R.S. **18 pages, with illustrations and tables, 8vo., paper, 40c.‡**

THE APPLICATION OF ELECTRICITY TO RAILWAY WORKING. By WILLIAM EDWARD LANGDON. Contents of Chapters: 1, On the construction of a telegraph line. 2, Surveying. 3, Construction. 4, Telegraph instruments and batteries. 5, Block signalling. 6, Single line working. 7, Automatic block signalling. 8, Interlocking. 9, Miscellaneous appliances in connection with block signalling. 10, Train lighting. 11, Electric light and power. 12, Intercommunication in trains. 13, Administration. Appendix. Index. **301 pages, 5 full page plates and 143 engravings and diagrams, 8vo., cloth, $5.00.**

ELECTRICAL TESTING OF TELEGRAPH CABLES. By COL. V. HOSKIAER. Third edition. **12mo., cloth, $1.50.**

HARD SOLDERING, A MANUAL OF INSTRUCTION IN. By H. ROWELL, with a chapter on soft soldering and brazing. **12mo., cloth, 75c.**

Digitized by Google

A MANUAL ON

THE CARE AND HANDLING

OF

ELECTRIC PLANTS.

Written for the practical engineer and adapted to the United States military Service. Including Dynamos, Motors, Wiring, Storage Batteries, Testing Instruments, Incandescent Lamps, Photometry and a chapter on the Oil Engine.

By NORMAN H. SCHNEIDER.

Late Electrical Expert, Southern Artillery District, New York.

Author of "Induction Coils and Coil Making," " Notes on United States Army Power Plants," etc.

This manual is intended as a practical handbook for electricians, engineers' assistants and all who are interested in the operation of commercial or military electric plants. The basis of the work were a number of notes and memoranda accumulated by the author during ten years of practical work and upon several courses of lectures delivered at Fort Wadsworth to officers of the U. S. Artillery, and also to non-commissioned officers." The chapter on incandescent lamps is especially valuable as this is a subject very little touched upon in other works. The selection of tables will be found very useful for reference. *Contents of Chapters:* 1. The Electric Current, Insulators, Conductors, Series and Multiple Connections, Wiring, etc.; 2. Dynamos and Motors, Varieties of Motors, Management, Equalizers, Starting boxes, Sparking and Heating Brushes, Practical Hints, etc.; 3. Electrical Measuring Instruments and how to use them; 4. The Storage Battery and its management, Testing, Equipments, Fluids, various Switchboards and their working, etc.; 5. The Incandescent Lamp, Testing, Life of Lamps, Photometry, etc.; 6. The Oil Engine, Belting, Lining up Engine, Pulleys, etc.; Index. 113 pages, illustrated with 66 original drawings and numerous useful tables.

Bound in limp leather, pocket size. By mail for $1.00

Digitized by Google

AN AMERICAN BOOK.

INDUCTION COILS and COIL MAKING.

Second edition thoroughly revised, greatly enlarged and brought up to latest American Practice,

BY H. S. NORRIE,

(NORMAN H. SCHNEIDER)

Considerable space in the new matter is given to the following: Medical and bath coils, gas engine and spark coils, contact breakers, primary and secondary batteries; electric gas lighting; new method of X-ray work, etc. A complete chapter on up-to-date wireless telegraphy; a number of new tables and 25 original illustrations. Great care has been given to the revision to make this book the best American work on the subject. A very complete index, contents, list of illustrations and contents of tables have been added.

Contents of Chapters.

1. Construction of coils; sizes of wire; winding; testing; insulation; general remarks; medical and spark coils. 2. Contact breakers. 3. Insulation and cements. 4. Construction of condensers. 5. Experiments. 6. Spectrum analysis. 7. Currents in vacuo; air pumps. 8. Rotating effects. 9. Electric gas lighting; in multiple; in series. 10. Primary batteries for coils; varieties; open circuit cells; closed circuit cells; solutions. 11. Storage or secondary batteries; construction; setting up; charging. 12. Tesla and Hertz effects. 13. Roentgen Radiography. 14. Wireless telegraphy; arrangement of circuits of coil and coherer for sending and receiving messages; coherers; translating devices; air conductors; tables; contents; index.

XII + 270 Pages, 79 Illustrations, 5 x 6½ Inches.
Cloth, $1.00.

Digitized by Google

INDUCTION COILS

AND

COIL MAKING.

A Treatise on the Construction and Working of Shock, Medical and Spark Coils.

By F. C. ALLSOP.

CONTENTS.

Induction; iron filings round poles of a magnet; magnetic whirls round wires carrying electric currents; electro-magnet; apparatus for observing the phenomena of induction; circuits of coil with both primary and secondary; primary shock coil; hints on the construction of coils generally; determining size of primary and secondary windings; table of resistances of copper wire, etc.; bobbins; iron core; winding the primary; winding the secondary; contact-breakers; terminals; bases for coils; putting the coil together; construction of condensers; shock and medical coils and their connections; methods of regulating shock; primary shock coils; method of winding last layer; bath coils; sledge coils; portable coils; street coils; accessory appliances for, and the application of medical coils; conducting cords and electrodes; galvanometers and milliamperemeters; collectors; current reversers; rheostats; spark coils; a 1-inch spark coil; sectionally-wound coils; a 2-inch spark coil; a 12-inch spark coil; App's spark coil; the polytechnic coil; the Spottiswoodie coil; experiments with spark coils; vacuum tubes, etc.; batteries for coil working—dry, Leclanché, bichromate, Edison Lelande, Grove, Bunsen—faults in medical and spark coils; figures produced by electric discharges on photographic plates; index.

172 Pages, 5 In. x 7¼, 124 Illustrations,

Cloth, $1.25

Digitized by Google

A GRADUATED COLLECTION OF

PROBLEMS IN ELECTRICITY.

Comprising all branches of Electrical Science.

By ROBERT WEBER, D. Sc.

Translated from the Third French Edition.

By E. A. O'KEEFFE, B. E., M. I. E. E.

EXTRACT FROM PREFACE.

"This graduated collection of problems in electricity fills a want I have often felt in the course of my teaching. In order the better to familiarize the student with the technical terms and the formulæ employed in this branch of physics, I thought it would be useful to collect a considerable number of exercises, to arrange them carefully, and to vary as much as possible the subjects of which they treat. This collection allows us to illustrate the theoretical course by numerous examples, to exercise the intelligence of the students, and to imprint on their memories the laws and electrical formulæ, the numerous applications of which tend every day to take a greater place in our lives."

The work is divied into the following divisions: Mechanics and heat, with 38 problems and answers; static electricity, with 153 problems and answers; dynamic electricity, with 555 problems and answers. The units adopted are mechanical, magnetic, electrical, practical electrical, legal and heat. With 26 tables. Index and contents.

XV. + 351 pages, 34 diagrams, 12mo., cloth, $3.00

Digitized by Google

FINSBURY TECHNICAL MANUALS.

Elementary

TELEGRAPHY AND TELEPHONY

BY

ARTHUR GROTCH.

EXTRACT FROM PREFACE.

"This work is intended to cover the intermediate ground between electricity and magnetism proper and the twin subjects of telegraphy and telephony.

"The elementary student does not desire to traverse the whole field of electricity, either the science or its application, but to understand such leading principles of the one as are necessary to a comprehension of simpler systems of the other. It has, therefore, been the author's aim to treat the subjects as fully as possible from this point of view, and to lay a firm foundation for the acquisition of larger future knowledge."

CONTENTS OF CHAPTERS.

I.—Magnetism.
II.—Terrestrial Magnetism—Magnetic Theory.
III.—Static Electricity.
IV.—Electrostatic Induction—Condensers.
V.—Dynamic Electricity—The Voltaic Cell.
VI.—Primary and Secondary Cells.
VII.—Resistance, Current and Electromotive Force.
VIII.—Effects of Current—Galvanometers.
IX.—Induction.
X.—Cross-Section—Combined Resistances.
XI.—Joining-Up of Cells—Universal Battery System.
XII.—Telegraphy: Single Needle—Sounder.
XIII.—Relays—Double-Current Working, etc.
XIV.—Wheatstone A B C—Steljes Recorder.
XV.—Differential Duplex.
XVI.—Bridge Duplex.
XVII.—Submarine.
XVIII.—The Telephone.
XIX.—Telegraph and Telephone Lines.
XX.—Elements of Testing. Index.

VII+223 Pages, 238 Illustrations, 8vo, Cloth, $2.00.

Digitized by Google

A History of ELECTRIC TELEGRAPHY

TO THE YEAR 1837.

Chiefly compiled from Original Sources and Hitherto Unpublished Documents.

By J. J. FAHIE.

CONTENTS.

In this work the author has divided the History of Electricity into three parts, (1) static, or frictional electricity, (2) dynamic, or galvanic electricity and (3) electro-magnetism and magneto-electricity. These in their turn are divided into three classes, electrical, galvanic (chemical), and electro-magnetic; and each class treated chronologically, follows naturally the corresponding part of the history of electricity up to the year 1837.

This work will be found valuable as a book of reference, and no electrical library is complete without a copy.

542 pages, 35 illustrations, 12mo., cloth, $3.00.

Philip Reis,

Inventor of THE TELEPHONE.

A BIOGRAPHICAL SKETCH,

With Documentary Testimony, Translations of the Original Papers of the Inventor and Contemporary Publications.

By Prof. Silvanus P. Thompson, D.Sc.,

CONTENTS OF CHAPTERS.

CHAPTER I.—Biography of the Inventor. II.—The Inventor's Apparatus; (*a*) Transmitters; (*b*) Receivers. III.—The claim of the Inventor. IV.—Contemporary documents. V—Testimony of Contemporary Witnesses. APPENDIX. CHAPTER I.—Comparison of Reis's Transmitters with recent Instruments. II.—On the variation of Electrical Resistance at a point of Imperfect Contact in a Circuit. III.—Comparison of Reis's Receivers with Recent Instruments. IV.—On the Doctrine of Undulatory Currents. Schedule of Authorities and References. Additional References concerning Reis's Telephone.

182 pages, 48 illustrations and two plates, 8vo., Cloth, $3.00.

Digitized by Google

A HAND BOOK OF

ELECTRICAL TESTING,

By H. R. KEMP, M.I.E.E., C.E.

Sixth edition, thoroughly revised and enlarged.

NOTE:—In the present edition the author has not only taken advantage as far as possible of the many friendly suggestions which have been made to him for the improvement of the original work, but has added a considerable amount of new matter, besides thoroughly revising the old.—*February, 1900.*

CONTENTS OF CHAPTERS.

1. Simple Testing. 2. Resistance Coils. 3. Galvanometers. 4. Shunts. 5. Measurement of Galvanometer Resistance. 6. Measurement of the Internal Resistance of Batteries. 7. Measurement of the Electro-motive Force of Batteries. 8. The Wheatstone Bridge. 9. Localization of Faults. 10. Keys, Switches, Condensers and Batteries. 11. Measurement of Potentials. 12. Measurement of Current Strengths. 13. Measurement of Electro-static Capacity. 14. The Thompson Quadrant Electrometer. 15. Measurement of High Resistances. 16. Measurement of Resistances by Potentials. 17. Localization of Faults by Fall of Potentials. 18. Tests, during the laying of a Cable. 19. Joint-testing. 20. Specific Measurement. 21. Corrections for Temperature. 22. Localization of Faults of High Resistance. 23. Localization of a Disconnection Fault in a Cable. 24. A Method of Localizating Earth Faults. 25. Galvanometer Resistance. 26. Specifications for Manufacture of Cable.—Systems of Testing Cable during Manufacture. 27. Appendix, Index and Numerous Tables.

VIII+646 pages, 238 illustrations, 8vo. cloth, $6 00‡

Digitized by Google

Design of Dynamos

BY

SILVANUS P. THOMPSON, D. Sc., B. A., F. R. S.

EXTRACTS FROM PREFACE.

" The present work is purposely confined to continuous current generators. The calculations and data being expressed in inch measures; but the author has adopted throughout the decimal subdivision of the inch; small lengths being in mils, and small areas of cross-section in sq. mils, or, sometimes, also, in circular mils."

CONTENTS OF CHAPTERS.

1. DYNAMO DESIGN AS AN ART.

2. MAGNETIC DATA AND CALCULATIONS. Causes of waste of Power. Coefficients of Dispersion. Calculation of Dispersion. Determination of exciting ampere-turns. Example of Calculation.

3. COPPER CALCULATIONS. Weight of Copper Wire. Electrical resistance of Copper, in cube, strip, rods, etc. Space-factors. Coil Windings; Ends; Insulation; Ventilating; Heating.

4. INSULATING MATERIALS AND THEIR PROPERTIES. A list of materials, including " Armalac," " Vitrite," " Petrifite," " Micanite," " Vulcabeston," " Stabilite," " Megohmite," etc. With tables.

5. ARMATURE WINDING SCHEMES. Lap Windings, Ring Windings, Wave Windings, Series Ring-Windings, Winding Formulæ. Number of circuits. Equalizing connections. COLORED PLATES.

6. ESTIMATION OF LOSSES, HEATING AND PRESSURE-DROP. Copper Losses, Iron Losses, Excitation Losses, Commutator Losses, Losses through sparking. Friction and Windage Losses. Secondary Copper Losses.

7. THE DESIGN OF CONTINUOUS CURRENT DYNAMOS. Working Constants and Trial Values; Flux-densities; Length of Air-gap; Number of Poles; Current Densities; Number of Armature Conductors; Number of Commutator Segments; Size of Armature (Steinmetz coefficient); Assignment of Losses of Energy; Centrifugal Forces; Calculation of Binding Wires; Other procedure in design. Criteria of a good design. Specific utilization of material.

8. EXAMPLES OF DYNAMO DESIGN.

1. Shunt-wound multipolar machine, with slotted drum armature. 2. Over-compounded Multipolar traction generator, with slotted drum armature, with general specifications, tables, dimensions and drawings, fully described.

A number of examples of generators are given in each chapter, fully worked out with rules, tables and data.

VIII.×253 pages, 92 illustrations, 10 large folding plates and 4 THREE-COLOR PLATES, 8vo., cloth, $3.50.

(Bound in Red Cloth as a companion volume to the second edition of Polyphase Electric Currents.)

Digitized by Google

PRACTICAL CONSTRUCTION

of

Electric Tramways

—BY—

William R. Bowker, C.E., M.E., E.E,

" An excellent treatise on Electric Tramway Construction, with numerous diagrams. The author's treatment being essentially practical, he at once dips into the question of laying out the permanent way. Chapter II. is devoted to the preparation of a substantial roadbed foundation, without which it is useless to expect reliable results. With the aid of numerous diagrams, he then describes the laying of the rails, plate laying, bonding, etc. As to the completion of roadbeds the author notes that no pavement has yet been discovered with so long a life as granite sets pavement judiciously laid. There is a good deal of useful information on wood pavement. Details of overhead equipment are carefully considered. Local faults, materials used, and testing and maintenance are considered."—*Page's Engineering Magazine.*

Contents of Chapters: 1. Laying out the Permanent Way; 2. Road bed Foundation, etc.; 3. Laying the Rails, Plate Laying, Bonding, etc.; 4. Completing the Road-bed; 5. Choice of Materials in the Laying-out of Curves for the Overhead Equipment; 6. Overhead Construction and Equipment; 7. Notes and details on Materials in the Construction and Equipment of Various Tramway Undertakings; 8. Testing and Maintenance of Electric Tramways; index.

VIII. + 119 pages, 93 diagrams, 8vo. cloth. $2.50

Digitized by Google

PRACTICAL HANDBOOK

ON

GAS ENGINES.

With Instructions for Care and Working of the Same.

By G. LIECKFELD, C.E.

TRANSLATED WITH PERMISSION OF THE AUTHOR BY

Geo. Richmond, M.E.

TO WHICH HAS BEEN ADDED FULL DIRECTIONS FOR THE RUNNING OF

OIL ENGINES.

CONTENTS.

Choosing and installing a gas engine. The construction of good gas engines. Examination as to workmanship. As to running. As to economy. Reliability and durability of gas engines. Cost of installing a gas engine. Proper erection of a gas engine. Construction of the foundation. Arrangement for gas pipes. Rubber bag locking devices. Exhaust pipes. Air pipes. Setting up gas engines. Brakes and their use in ascertaining the power of gas engines. Theory of the brake. The Brauer band brake. Arrangement of a brake test. Explanation of the expressions "Brake Power" and "Indicated Power." Comparisons of the results of the brake test and the indicated test. Quantity of work consumed by external friction of the engine Distribution of heat in a gas engine Attendance on gas engines. General remarks. Gas engine oil. Cylinder lubricators Rules as to starting and stopping a gas engine. The cleaning of a gas engine. General observations and specific examination for defects. Different kinds of defectives. The engine refuses to work. Non-starting of the engine. Too much pressure on the gas. Water in the exhaust pot. Difficulty in starting the engine. Clogged slide valve. Leaks in gas pipes. Unexpected stopping of engine. Irregular running. Loss of power. Weak gas mixtures. Late ignition. Cracks in air inlet. Back firing. Knocking and pounding inside of engine. Dangers and precautionary measure in handling gas engines. Examination of gas pipes. Precautions when :—Opening gas valves. Removing piston from cylinder. Examining with light openings of gas engines. Dangers in starting. Dangers in cleaning. Safeguards for fly-wheels. Danger of putting on belts. **Oil Engines.** Gas engines with producer gas. Gasoline and oil engines The "Hornsby-Akroyd' oil engine. Failure to start. Examination of engine in detail. Vaporizer valve box. Full detailed directions for the management of Oil Engines. Concluding remarks. 120 pages, Illustrated, 12mo. cloth, $1.00

Digitized by Google

The Design and Construction

OF

OIL ENGINES.

WITH FULL DIRECTIONS FOR

Erecting, Testing, Installing, Running and Repairing.

Including descriptions of American and English

KEROSENE OIL ENGINES.

By A. H. GOLDINGHAM, M.E.

SYNOPSIS OF CONTENTS OF CHAPTERS:

1. Introductory; classification of oil engines; vaporizers; ignition and spraying devices; different cycles of valve movements. 2. On design and construction of oil engines; cylinders; crankshafts; connecting rods; piston and piston rings; fly-wheels; air and exhaust cams, valves and valve boxes; bearings; valve mechanism, gearing and levers; proportions of engine frames: oil-tank and filter; oil supply pipes; different types of oil engines; cylinders made in more than one piece; single cylinder and double cylinder engines; crank-pin dimensions; fitting parts; assembling of oil engine; testing water jackets, joints, etc. 3. Testing for leaks, faults, power, efficiency, combustion, compression; defects as shown by indicator; diagrams for setting valves; how to correct faults; indicator fully described; fuel consumption test, etc. 4. Cooling water tanks; capacity of tanks; source of water supply; system of circulation; water pump; exhaust silencers; self starters; utilization of waste heat of exhaust. 5. Oil engines driving dynamo; installation of plant; direct and belt connected; belts; power for electric lighting; loss of power. 6. Oil engines driving air compressors; direct connected and geared; table of pressures; pumping outfits; oil engines driving ice and refrigeration outfits. 7. Full instructions for running different kinds of oil engines. 8. Hints on repairs; adjustment of crank-shaft and connecting rod bearing; testing oil inlet valves and pump; fitting new spur gears, etc. 9. General descriptions with illustrations of American and English oil engines; methods of working; portable oil engines, etc., etc. Index and tables.

XIII. + 196 pages, 7½ x 5½, 79 illustrations, cloth, $2.00

Digitized by Google

GAS AND OIL ENGINES Simply Explained. The young mechanic who wishes to understand how a gas or an oil engine works, will find just the instruction he requires in this work. **Fully illustrated. 25 cts.**

GAS PRODUCERS for Power Purposes, describing a number of different plants, using various materials for making gas for power purposes. 141 pages, with numerous drawings of plants. **Boards. 50 cts.**

BEGINNERS' GUIDE TO CARPENTRY. A very practical new work describing tools and their uses, how to use them and how to keep them sharp; Timber, Laying Out Work, Planing, Sawing, Finishing, Joints, how to make certain articles, with a number of illustrations showing how to hold and use the different tools. **128 pages, 99 illustrations, 12mo., boards. 50 cts.‡**

PRACTICAL LESSONS IN METAL TURNING, by P. MARSHALL. A thoroughly practical work in nine chapters, treating of the Tools, Measuring Appliances, Chucks and Mandrels, Centering, Driving, Turning, Chuck and Face Plate Work, Drilling and Boring, Screw Cutting. **166 pages, 193 illustrations, 12mo., cloth. $1.00.‡**

IGNITION DEVICES for Gas and Petroleum Engines, with an introductory chapter treating specially of structural details, choice and management of automobiles, by S. R. BOTTONE. **92 pages, 16 illustrations, cloth. $1.00.‡**

THE MODEL LOCOMOTIVE, Its Design and Construction. A practical manual on the building and management of Miniature Railway Engines, by HENRY GREENLEY. The book deals primarily with *working* model locomotives in all sizes, and for the most part for those built for the instruction and amusement of their owners. The subject is treated thoroughly and practically and profusely illustrated with details, diagrams and a number of large folding scale drawings. **276 pages, 9 in.x5½ in., cloth. $2.50.‡**

DYNAMO DESIGN, the A B C of, by A. A. AVERY. Second edition. **Contents of Chapters.**—1. General Principles of Dynamo Design. 2. The Armature. 3. Armature Action and Reaction. 4. The Construction and Winding of Armatures. 5. The Field Magnet. 6. Design for a 30-Watt Dynamo. 7. Design for a 500-Watt Dynamo. 8. Design for a 2-kilowatt Dynamo **103 pages 60 illustrations and drawings. 12mo., cloth. 50 cts.***

PROJECTION DRAWING. Twelve plates on, by OSWALD GUETH, M.E., Inst. Mech. Drawing, Cooper Inst., N. Y. Arranged in three sections: *Projections*, plate 1, Prisms; 2, Pyramids; 3, Inclined Prisms; 4, Inclined Pyramids. *Sections*, plate 5, Prisms and Pyramids; 6, Cones; 7, Spheres; 8, Various Solids. *Intersections*, plate 9, Prisms; 10, Cylinders; 11, Spheres; 12, Prisms and Pyramids. **Size, 8½x11 in., sewn. 75 cts.‡**

Digitized by Google

A B C OF THE Steam Engine

WITH A DESCRIPTION OF THE

Automatic Shaft Governor.

By J. P. LISK, M.E.

WITH SIX LARGE SCALE DRAWINGS.

A practical hand-book for Firemen Helpers and Young Engineers, giving a set of detail drawings all numbered and lettered and with names and particulars of all parts of an up-to-date American High Speed Steam Engine. Also a large drawing and full description of the Automatic Shaft Governor. With notes and practical hints.

This work will prove of great help to all young men who wish to obtain their Engineer's License because it is

Easy to Understand, Easy to Remember,

and gives the Latest American Practice.

I. Longitudinal Section Through Cylinder, and Top View of High Speed Horizontal Steam Engine.
II. Side Elevation of High Speed Horizontal Steam Engine.
III. Detail Drawing of Connecting Rod and Piston of High Speed Horizontal Steam Engine.
IV. Detail of Piston Valve; Eccentric Strap and Rod; Valve Stem Guide; and Eccentric of High Speed Horizontal Steam Engine.
V. Detail of Crosshead; Crosshead Slipper; Wrist Pin; Crank Pin; Stuffing Box, etc., of High Speed Horizontal Steam Engine,
VI. Detail of Centrifugal Automatic Governor for High Speed Horizontal Steam Engine.

Copies mailed, post-paid, to any address on receipt of **Fifty Cents.**

Diagram of the Corliss Engine.

A large engraving giving a Longitudinal Section of the Corliss Engine Cylinder, showing relative positions of the Piston, Steam Valves, Exhaust Valves and Wrist Plates when cut-off takes place at ¼ stroke for each 15 degrees of the circle. With full particulars. Reach-rods and Rock.shafts. The Circle explained. Wrist-plates and Eccentrics. Explanation of Figures, etc., etc. Printed on heavy ledger paper, size 13 in. x 19 in. **Price. 25 Cents each**

Special Price on a Quantity.

Digitized by Google

HOW TO RUN

ENGINES AND BOILERS.

New Edition With a Section on Water Tube Boilers.

Practical Instruction for Young Engineers and Steam Users.

By EGBERT POMEROY WATSON.

Synopsis of Contents.

Cleaning the boiler, removing scale, scale preventers, oil in boilers, braces and stays, mud drums and feed pipes, boiler fittings, grate bars and tubes, bridge walls, the slide valve, throttling engine, the piston, testing the slide valve with relation to the ports, defects of the slide valve, lap and lead, the pressure on a slide valve, stem connections to the valve, valves off their seats, valve stem guides, governors, running with the sun, eccentrics and connections, the crank pin, brass boxes, bearings on pins, adjustment of bearings, the valve and gearing, setting eccentrics, the actual operation, return crank motion, pounding, the connections, lining up engines, making joints, condensing engines, Torricelli's vacuum, proof of atmospheric pressure, pumps, no power in a vacuum, supporting a water column by the atmosphere, starting a new plant, &c., &c.

Water tube boilers, fire tube boilers, why water tube boilers steam rapidly, torpedo boat boilers, management of water tube boilers, economy and maintenance of water tube boilers, different types of water tube boilers. **160 pages, illustrated, 12mo, cloth, $1.00.**

THE FIREMAN'S GUIDE.

A Handbook on the Care and Management of Boilers.

By KARL P. DAHLSTROM, M.E.

Contents of Chapters.

I. Firing and Economy of Fuel.—Precautions before and after starting the fire, care of the fire, proper firing, draft, smoke, progress of firing, fuel on the grate, cleaning out, cleaning grate bars and ash pan, dampers, firing into two or more furnaces, dry fuel, loss of heat.

II. Feed and Water Line.—Feeding, the water line, false water line, defective feeding apparatus, formation of scale, guage cocks, glass guage, the float, safety plug, alarm whistle.

III. Low Water and Foaming or Priming.—Precautions when water is low, foaming, priming.

IV. Steam Pressure.—Steam gauge, safety valves.

V. Cleaning and Blowing Out.—Cleaning the boiler, to examine the state of the boiler, blowing out, refilling the boiler.

VI. General Directions.—How to prevent accidents, repairs, the care of the boiler when not in use, testing boilers, trimming and cleaning outside. **Summary of rules. Index. 8vo, cloth, 50 cents.**

Digitized by Google

THE SLIDE VALVE

SIMPLY EXPLAINED.

By W. J. TENNANT, Asso. M. Inst. Mech. E.

The work has been thoroughly revised and enlarged in accordance with the present American Practice.

By J. H. KINEALY, D. E., M. Am. Soc. Mech. E.

The work is based upon notes and diagrams which were prepared by Mr. Tennant in his lectures to his classes of working engineers and students towards the obtainment of clear *general* notions upon the Slide Valve, its design, varieties, adjustments and management. They have been revised and considerably added to and in this form the authors believe they will be of considerable value to all engineers and others interested in steam engines.

CONTENTS OF CHAPTERS.

I. The Simple Slide.
II. The Eccentric a Crank. Special Model to give Quantitative Results.
III. Advance of the Eccentric.
IV. Dead Centre. Order of Cranks. Cushioning and Lead.
V. Expansion—Inside and Outside Lap and Lead; Advance affected thereby. Compression.
VI. Double-ported and Piston Valves.
VII. The Effect of Alterations to Valve and Eccentric.
VIII. Note on Link Motions.
IX. Note on very early cut-off, and on Reversing Gears in general.

The illustrations aim to cover the different kinds of **Slide Valves**, and the circular diagrams will prove a novel feature.

88 Pages. 41 Illustrations. 12mo. Cloth, $1.00

Digitized by Google

THEORETICAL AND PRACTICAL

Ammonia Refrigeration.

A Work of Reference for Engineers and others Employed in the Management of Ice and Refrigeration Machinery.

BY ILTYD I. REDWOOD,

Assoc. Mem. Am. Soc. of M. E.; Mem. Soc. Chem. Indus. Eng.

CONTENTS.

B. T. U. Mechanical Equivalent of a Unit of Heat. Specific Heat. Effect of Pressure on Specific Heat of Ammonia Gas. Specific Heat of Air with Constant Pressure. Specific Heat of Air with Constant Volume. Latent Heat. Latent Heat of Liquefaction. Latent Heat of Vaporization. Latent Heat of Water. Absolute pressure. Absolute Temperature. Absolute Zero. Effect of Pressure on Volume of Gases. Theory of Refrigeration. Freezing by Compressed Air. Freezing by Ammonia. Characteristics of Ammonia. Explosiveness. Tendency of the Gas to Rise. Solubility in Water. Action on Copper. 26° Ammonia. Anhydrous Ammonia. The Compressor. Stuffing-Boxes. Special Lubrication. Oil for Lubrication. Clearance Space, etc. Suction and Discharge Valves. Effect of Excessive Valve-Lift. Regulation of Valve-Lift. Separator, Condenser, Condenser-Worm, Receiver. Refrigerator or Brine Tank. Size of Pipe and Area of Cooling Surface. Expansion Valves. Working Details—Charging the Plant with Ammonia. Jacket-Water for Compressor. Jacket-Water for Separator. Quantity of Condensing Water Necessary. Loss due to Heating of Condensed Ammonia. Superheating Ammonia Gas. Cause of Variation in Excess Pressure. Use of Condensing Pressure in Determining Loss of Ammonia by Leakage. Cooling Directly by Ammonia. Brine. Freezing Point of Brine. Effect of Composition on Freezing Point. Effect of Strength on Freezing Point. Suitableness of the Brine. Making Brine. Specific Heat of Brine. Regulation of Brine Temperature. Indirect Effect of Condensing Water on Brine Temperature. Directions for Determining Refrigerating Efficiency. Equivalent of a Ton of Ice. Compressor Measurement of Ammonia Circulated. Loss of Well-Jacketed Compressors. Loss in Double Acting Compressors. Distribution of Mercury Wells. Examination of Working Parts. Indicator Diagrams. Ammonia Figures—Effectual Displacement Volume of Gas. Ammonia Circulated per Twenty-Four Hours. Refrigerating Efficiency. Brine Figures—Gallons Circulated. Pounds Circulated. Degrees Cooled. Total Degrees Extracted. Loss due to Heating of Ammonia Gas. Loss due to Heating of Liquid Ammonia. Calculation of the Maximum Capacity of a Machine. Preparation of Anhydrous Ammonia. Construction of Apparatus. Condenser-Worm. Why Still is Worked under Pressure. Best Test for Ammonia. Water from Separators. Lime for Dehydrator. Yield of Anhydrous from 26° Ammonia. Index.

150 Pages, 15 Illustrations and 24 Pages of Tables, 12mo, Cloth, $1.00.

Digitized by Google

LUBRICANTS,

OILS AND GREASES.

TREATED THEORETICALLY AND GIVING PRACTICAL INFORMATION REGARDING THEIR

COMPOSITION, USES AND MANUFACTURE.

A PRACTICAL GUIDE FOR MANUFACTURERS, ENGINEERS, AND USERS IN GENERAL OF LUBRICANTS.

By ILTYD I. REDWOOD,

Associate Member American Society of Mechanical Engineers; Member Society Chemical Industries (England); Author of 'Theoretical and Practical Ammonia Refrigeration,' and a 'Practical Treatise on Mineral Oils and Their By-Products.'

CONTENTS.

INTRODUCTION.—Lubricants.

THEORETICAL.

CHAPTER I.—Mineral Oils: American and Russian; Hydrocarbons.
CHAPTER II.—Fatty Oils: Glycerides; Vegetable Oils; Fish Oils.
CHAPTER III.—Mineral Lubricants: Graphite; Plumbago.
CHAPTER IV.—Greases: Compounded; "Set" or Axle; "Boiled" or Cup.
CHAPTER V.—Tests of Oils: Mineral Oils. Tests of Oils: Fatty Oils

MANUFACTURE.

CHAPTER VI.—Mineral Oil Lubricants: Compounded Oils; Debloomed Oils.
CHAPTER VII.—Greases: Compounded Greases; "Set" or Axle Greases; Boiled Greases; Engine Greases.
APPENDIX.—The Action of Oils on Various Metals. Index.
TABLES: I.—Viscosity and Specific Gravity. II.—Atomic Weights. III.—Origin, Tests, Etc of Oils. IV.—Action of Oils on Metals.
LIST OF PLATES: I.—I. I. Redwood's Improved Set Measuring Apparatus II.—Section Grease Kettle. III.—Diagram of Action of Oils on Metals.

8vo. Cloth. $1.50.

Digitized by Google

Published Weekly, **Annual subscription,** **Subscription 6 months, $1.50**
Single numbers, 8c. **$3.00 postpaid.** **" 4 " $1.00**

THE MODEL ENGINEER
AND ELECTRICIAN.

The BEST Paper for Young Engineers, Students, Model Makers, Apprentices, and all interested in Mechanical and Electrical Work.

SPECIAL FEATURES.

Practical Articles by experienced writers on the construction and working of model steam, gas and oil engines; model locomotives and railways; model boilers; model steam and electric launches, and sailing yachts; lathes and metal and wood-working tools; pattern-making; brass and iron founding; forging; model dynamos and motors; electric bells, telephones and batteries; accumulators; electric lighting; influence machines; electrical experiments; motor cycles, &c., &c.

Model Engineers and their Work.—Illustrated interviews with prominent model engineers, describing their workshops, their methods of working; and some of their models.

Our Beginners' Column.—A section devoted to elementary instruction on the use of tools; the making of simple apparatus and models, and the carrying out of easy experiments.

Practical Letters from our Readers.—A correspondence column, wherein readers can describe workshop appliances or methods of their own invention and discuss practical matters of mutual interest.

Amateurs' Supplies.—Under this heading short descriptions of new tools, apparatus and materials are inserted, thus keeping the reader posted up in the latest improvements.

A System of Queries and Replies, by which all readers of the journal can obtain information and advice on mechanical or electrical subjects.

Original Working Drawings and high-class illustrations are a regular feature of the journal.

Prize Competitions open to all readers, are announced from time to time, on all subjects.

Model Yachting Notes, New Books, &c., &c.

All subscriptions should be sent to

SPON & CHAMBERLAIN, **Sole American Agents.**

123-125 Liberty Street, NewYork, U. S. A.

Digitized by Google

Dubelle's Famous Formulas.

KNOWN AS

Non Plus Ultra Soda Fountain Requisites of Modern Times.

By G. H. DUBELLE.

A practical Receipt Book for Druggists, Chemists, Confectioners and Venders of Soda Water.

SYNOPSIS OF CONTENTS.

INTRODUCTION.—Notes on natural fruit juices and improved methods for their preparation. Selecting the fruit. Washing and pressing the fruit. Treating the juice. Natural fruit syrups and mode of preparation. Simple or stock syrups.

FORMULAS.

FRUIT SYRUPS.—Blackberry, black current, black raspberry, catawba, cherry, concord grape, cranberry, lime, peach, pineapple, plum, quince, raspberry, red current, red orange, scuppernong grape, strawberry, wild grape. NEW IMPROVED ARTIFICIAL FRUIT SYRUPS.—Apple, apricot, banana, bitter orange, blackberry, black current, cherry, citron, curacoa, grape, groseille, lemon, lime, mandarin, mulberry, nectarine, peach, pear, pineapple, plum, quince, raspberry, red current, strawberry, sweet orange, tangerine, vanilla. FANCY SODA FOUNTAIN SYRUPS.—Ambrosia, capillaire, coca-kina, coca-vanilla, coca-vino, excelsior, imperial, kola-coca, kola-kina, kola-vanilla, kola-vino, nectar, noyean, orgeat, sherbet, syrup of roses, syrup of violets. ARTIFICIAL FRUIT ESSENCES.—Apple, apricot, banana, bergamot, blackberry, black cherry, black currant, blueberry, citron, cranberry, gooseberry, grape, lemon, lime fruit, melon, nectarine, orange, peach, pear, pineapple, plum, quince, raspberry, red currant, strawberry. CONCENTRATED FRUIT PHOSPHATES. Acid solution of phosphate, strawberry, tangerine, wild cherry.—29 different formulas. NEW MALT PHOSPHATES—36. FOREIGN AND DOMESTIC WINE PHOSPHATES—9. CREAM-FRUIT LACTARTS—28. SOLUBLE FLAVORING EXTRACTS AND ESSENCES—14. NEW MODERN PUNCHES—18. MILK PUNCHES—17. FRUIT PUNCHES—32. FRUIT MEADS—18. NEW FRUIT CHAMPAGNES—17. NEW EGG PHOSPHATES—14. FRUIT JUICE SHAKES—24. EGG PHOSPHATE SHAKES. HOT EGG PHOSPHATE SHAKES. WINE BITTER SHAKES—12. SOLUBLE WINE BITTERS EXTRACTS—12. NEW ITALIAN LEMONADES—18. ICE CREAM SODAS—39. NON-POISONOUS COLORS. FOAM PREPARATIONS. MISCELLANEOUS FORMULAS—26. LATEST NOVELTIES IN SODA FOUNTAIN MIXTURES—7. TONICS.—Beef, iron and cinchona; hypophosphite; beef and coca; beef, wine and iron; beef, wine, iron and cinchona; coca and calisaya. LACTARTS.—Imperial tea; mocha coffee; nectar; Persian sherbert. PUNCHES. EXTRACTS.—Columbia root beer; ginger tonic; soluble hop ale. LEMONADES.—French; Vienna. Egg nogg. Hop ale. Hot tom. Malt wine. Sherry cobbler. Saratoga milk shake. Pancretin and wine. Kola-coco cordial. Iron malt phosphate. Pepsin, wine and iron, etc

157 Pages, Nearly 500 Formulas. 12mo, Cloth, $1

Digitized by Google

Digitized by Google

Digitized by Google

Digitized by Google

THE NEW YORK PUBLIC LIBRARY
REFERENCE DEPARTMENT

This book is under no circumstances to be taken from the Building

form 410

Digitized by Google

JUN 12 1922

Digitized by Google

Digitized by Google